CITY OF MADISON
CONSTRUCTION STANDARDS FOR
DEVELOPMENT AND PUBLIC IMPROVEMENTS

Adopted: June, 1997

These standards are to be used in conjunction with the City of Madison Subdivision Regulations dated June, 1997.

CITY OF MADISON

CITY COUNCIL

Robert Schoenstein
Irene Ritter
David Goebel
Tad Callis
Don Joslin
Bob May
Benji Peak

Attest:

Beverly G. Armstrong, Clerk-Treasurer

CITY OF MADISON
INDIANA
CONSTRUCTION STANDARDS

TABLE OF CONTENTS

ARTICLE I - EARTHWORK

SITE CLEARING
EXCAVATING AND BACKFILL FOR STRUCTURES
TRENCHING AND BACKFILLING FOR UTILITIES
TOPSOIL
MULCHED SEEDING

ARTICLE II - SANITARY SEWER SYSTEMS

GRAVITY SANITARY SEWER
FORCE MAINS
PRECAST CONCRETE STRUCTURES
LIFT STATION EQUIPMENT

ARTICLE III - WATER DISTRIBUTION SYSTEM

DOMESTIC WATER SYSTEMS

ARTICLE IV - STORM SEWER SYSTEMS

STORM SEWERS
INLETS AND CATCH BASINS

ARTICLE V - STREETS

STREETS AND ROADS

LIST OF FIGURES

FIGURE NO.	DESCRIPTION
DETAILS FOR EARTHWORK	
I-1	UTILITY TRENCH DETAIL
I-2	PIPE BEDDING DETAIL
I-3	CONCRETE ENCASEMENT DETAIL
DETAILS FOR SANITARY SEWER SYSTEMS	
II-1	MANHOLE DETAIL - TYPE I
II-2	DROP MANHOLE DETAIL - TYPE 1
II-3	MANHOLE DETAIL - TYPE II
II-4	MANHOLE BENCHING DETAILS
II-5	LIFT STATION W/ VALVE PIT DETAIL
II-6	LIFT STATION CONTROL PANEL DETAIL
II-7	FENCE DETAILS
II-8	FORCE MAIN THRUST BLOCK DETAILS
II-9	HOUSE SERVICE CONNECTION
DETAILS FOR WATER DISTRIBUTION SYSTEMS	
III-1	WATER MAIN THRUST BLOCK DETAIL
III-2	VALVE BOX DETAIL
III-3	FIRE HYDRANT DETAIL
III-4	WATER METER DETAIL
III-5	CONNECTION TO EXISTING WATER MAIN
DETAILS FOR STORM SEWER SYSTEMS	
IV-1	UNDERDRAIN BEDDING DETAIL
IV-2	DRAINAGE DITCH DETAIL
DETAILS FOR STREETS AND IMPROVEMENTS	
V-1	SUBDIVISION ENTRANCE DETAIL
V-2	TYPICAL STREET SECTION DETAIL
V-3	TYPICAL PAVEMENT SECTION DETAIL
V-4	JOINT DETAILS
V-5	CURB AND GUTTER DETAILS
V-6	REPAIR OF PAVEMENT CUTS
V-7	CONCRETE SIDEWALK DETAILS
V-8	SIDEWALK HANDICAP RAMP DETAIL
V-9	SUBDIVISION CUL-DE-SAC DETAIL
V-10	STREET SIGN DETAILS
V-11	RESIDENTIAL DRIVEWAY DETAILS

CITY OF MADISON
CONSTRUCTION STANDARDS FOR
DEVELOPMENT AND PUBLIC IMPROVEMENTS

Adopted: June, 1997

These standards are to be used in conjunction with the City of Madison Subdivision Regulations dated _____.

CITY OF MADISON

CITY COUNCIL

_____

_____

_____

_____

_____

_____

Attest:_____
Clerk-Treasurer

ARTICLE I
CONSTRUCTION STANDARDS FOR EARTHWORK

SECTION A - SITE CLEARING

PART 1 - GENERAL

1.01 DESCRIPTION: The Contractor shall clear and grub the project site as described herein. Clearing and grubbing shall consist of clearing the surface of the ground of the designated areas of all trees, stumps, down timber, logs, snags, brush, undergrowth, hedges, heavy growth of grass or weeds, fences, buildings, debris and rubbish of any nature, natural obstructions or such material which is unsuitable for the foundations, pavements, or other required structures, including the grubbing of stumps, roots, matted roots, and the disposal from the project of all spoil materials resulting from clearing and grubbing by burning or otherwise.

PART 2 - PRODUCTS (NOT USED)

PART 3 - EXECUTION

3.01 CLEARING AND GRUBBING:

A. Clearing and grubbing will be performed by the Contractor within the project construction limits. All items removed by clearing and grubbing shall be disposed of offsite except as otherwise approved by the City.

B. Grubbing shall be carried to a depth of 12 inches below existing ground, except in areas of 3 feet or more of fill, where stumps and other objects may extend 6 inches above existing ground. All holes remaining after grubbing operations shall be filled with suitable material and properly compacted.

SECTION B - EXCAVATING AND BACKFILL FOR STRUCTURES

PART 1 - GENERAL

1.01 DESCRIPTION: This section describes the work involved with excavating, filling and embankment for the various structures such as utility manholes, lift stations, drainage structures, etc., as shown on the plans. The work shall include all excavation and trenching; handling, storage, transportation and disposal of excavated material; all necessary sheeting, shoring and protection of work; subgrade preparations; pumping and dewatering as necessary or required; protection of adjacent property; backfilling; construction of fills and embankments; and other appurtenant work as required for the construction.

1.02 QUALITY ASSURANCE: Testing and inspection services as required by this section shall be provided by Contractor. Tests will include hand auger probing, field density tests for verifying the degree of compaction and excavation inspections to determine the limits of unsuitable material to be removed.

1.03 REFERENCES:

A. American Society of Testing Materials (ASTM) Publications:

1.	ASTM D-698	Moisture - Density Relations of Soils Using 5.5-lb. Rammer and 12-inch Drop.
2.	ASTM D-1556	Density of Soil in Place by the Sand Cone Method.
3.	ASTM D-2167	Density of Soil in Place by the Rubber Balloon Method.
4.	ASTM D-2922	Density of Soil and Soil-Aggregate in Place by Nuclear Methods (Shallow Depth).
5.	ASTM D-3017	Moisture Content of Soil and Soil-Aggregate in Place by Nuclear Methods (Shallow Depth).

B. Indiana Department of Transportation (INDOT) Publication: Latest edition of the Standard Specifications.

C. Occupational Safety and Health Administration (OSHA) Standards 29 CFR Part 1926 including subparts A, B, C, D and P.

PART 2 - PRODUCTS

2.01 FILL MATERIALS:

A. Granular Backfill material shall be as defined in Section 211.02 ("B" Borrow) of the Indiana Department of Highways Standard Specifications, latest edition.

B. Coarse Aggregate shall be No. 1 or No. 2 size coarse aggregate as specified by Section 903.02 of the Indiana Department of Highways Standard Specifications, latest edition.

C. General Fill: General fill material is defined as a soil material which conforms to the following:

1. Contains no more than five (5) percent organic material and is free of trash, rubble, or other man-made objects.

2. Contains no particles larger than four (6) inches.

D. Structural Backfill: Structural backfill material shall be:

1. Sand and gravel or crushed stone with two (2) inch maximum particle size and containing no more than eight (8) percent by weight passing a no. 200 sieve.

2. In addition, the uniformity coefficient shall be greater than four (4).

3. The liquid limit shall not be greater than 25 and the plasticity index not more than 6.

E. Porous Backfill shall be gravel, or crushed stone meeting the requirements of ASTM 448, No. 4 size coarse aggregate.

PART 3 - EXECUTION

3.01 TOPSOIL: All areas requiring excavation or grading revisions shall be stripped of topsoil to a minimum depth of 6". The Contractor shall stockpile the topsoil for reuse at the site. The topsoil shall be free of trash, debris, and surface vegetation. Final placement of topsoil shall be performed in accordance with Section D of this Article.

3.02 EXCAVATION:

A. GENERAL:

1. Excavation shall be performed to the lines and grades shown on the plans. The work shall be performed in a safe and proper manner with suitable precautions being taken against all hazards. Excavations shall provide adequate working space and clearances for the work to be performed including the installation and removal of concrete forms. In no case shall excavation faces be undercut for extended footings.

2. Subgrade surfaces shall be clean and free of loose material of any kind when concrete is placed thereon.

3. All suitable excavated material meeting the requirements of General Fill shall be used as backfill, in the formation of embankments or engineered fill, or for other purposes shown on the plans. All unsuitable material shall be removed from the site unless otherwise allowed by the City. Satisfactory excavated materials shall be stockpiled until required for fill or embankment. Stockpiles shall be graded and shaped for proper drainage.

4. When the volume of the excavation exceeds that required to construct fill to the grades indicated, the excess shall be disposed of off site unless allowed by the City. When the volume of excavation is not sufficient for constructing the fill to the grades indicated the Contractor shall obtain the needed fill from off site sources.

5. Excavation work shall be performed in accordance with all applicable provisions of the OSHA Standards for excavation safety.

B. UNDERGROUND UTILITIES: Utilities shall be located in areas of work prior to commencement of work. If utilities are to remain in place, adequate means of support and protection during earthwork operations shall be provided. Should unknown or unidentified piping or other utilities be encountered during excavation, the Contractor shall consult applicable utilities immediately for directions. The Contractor shall cooperate with the City and the utility companies in keeping respective services and facilities in operation. The Contractor shall repair damaged utilities to the satisfaction of the utility owner.

C. SHEETING AND SHORING: Except where banks are cut back on a stable slope, excavation for structures and trenches shall be properly and substantially sheeted, braced and shored, as necessary, to prevent caving or sliding, to provide protection for workmen and the work. Sheeting, bracing, and shoring shall be designed and built to withstand all loads that might be caused by earth movement or pressure, and shall be rigid, maintaining shape and position under all circumstances. Sheeting and shoring shall comply with all applicable requirements of the OSHA Standards for excavation.

D. UNSUITABLE BEARING MATERIAL: Materials encountered at design elevations which are considered inadequate for suitable bearing shall be removed and replaced. Removal shall be to a depth as required to reach suitable bearing material. Fill material shall consist of either Structural Backfill or concrete.

E. SUBGRADE STABILIZATION:

1. Subgrades for concrete structures shall be firm, dense, and thoroughly compacted and consolidated; shall be free from mud; and shall be sufficiently stable to remain firm and intact under the feet of the workmen.

2. Subgrades for concrete structures which are otherwise solid, but which become mucky on top due to construction operations, shall be reinforced with crushed stone or gravel. The finished elevation of stabilized subgrades shall not be above subgrade elevations shown on the Plans.

F. ROCK EXCAVATION:

1. For the purpose of excavated materials, rock is defined as boulders and solid masonry larger than 1/2 cubic yard in volume or solid ledge rock and masonry which requires removal by means of blasting,drilling, or otherwise breaking up with power operated tools. Any material which can be reasonably removed by hand tools, backhoe, or power operated excavator shall not be defined as rock.

2. Blasting:

   a. No blasting of rock shall be performed within 40 feet of existing pipes or other structures. Blasts shall be properly covered and the pipe or structure properly protected. Warning shall be given to all people in the immediate vicinity. Blasting shall be at the risk of the Contractor who shall be liable for all damages to people or property. Necessary permits shall be secured and paid for by the contractor. The City shall be notified at least three days before blasting is to take place.

   b. Only experienced, skillful and trustworthy workmen shall be employed in the handling and use of explosives, or have access thereto. All blasting operations shall be conducted in strict accordance with existing ordinances, regulations and specifications relative to rock blasting and the storage and use of explosives.

   c. The contractor shall keep explosives on the site only in such quantity as may be needed for the work under way and only during such time as they are being used. Explosives shall be stored in a secure manner and separate from all tools. Caps or detonators shall be safely stored at a point over 100 feet distant from the explosives. When the need for explosives has ended, all such materials remaining on the site shall be promptly removed from the premises.

d. In addition to observing all municipal ordinances and state and federal laws relating to the transportation, storage, handling, and use of explosives, the contractor shall conform to any further regulations which the City may think necessary in this respect. In the event that any of the above mentioned laws, ordinances, or regulations require a licensed blaster to perform or supervise the work of blasting, said licensed blaster shall, at all times, have his license on the work and shall permit examination thereof by the City or other officials having jurisdiction.

G. DEWATERING:

1. The Contractor shall provide and maintain adequate dewatering equipment to remove and dispose of all surface and ground water entering excavations, trenches, or other parts of the work. Each excavation shall be kept dry during subgrade preparation and continually thereafter until the structure to be built, or pipe to be installed therein is completed to the extent that no damage from hydrostatic pressure, flotation, or other cause will result.

2. All excavations which extend down to or below static ground water elevations shall be dewatered by lowering and maintaining the ground water surface beneath such excavations a distance of not less than 12 inches throughout the time the excavation remains open.

3. Surface water shall be diverted or otherwise prevented from entering excavated areas or trenches to the greatest extent practicable without causing damage to adjacent property.

4. The Contractor will be held responsible for the condition of any pipe or conduit which he may use for drainage purposes, and all such pipes or conduits shall be left clean and free of sediment.

5. Water shall be disposed of in such a manner as will not cause injury to public or private property nor be a nuisance or a menace to the public. The Contractor shall be responsible for any and all permits and approvals thereof necessary for disposal of the water.

3.03 BACKFILL AND EMBANKMENT:

A. MATERIALS:

1. To the maximum extent available excess earth obtained from structure and trench excavation shall be used for the construction of fills and embankments. Additional material shall be obtained by the Contractor from outside sources.

2. All material placed in fills and embankments shall meet the requirements of General Fill as previously defined. No rocks or stones shall be placed in the upper 18 inches of any fill or embankment. Rocks or stones within the allowable size limit may be incorporated in the remainder of fills and embankments, provided they are distributed so that they do not interfere with proper compaction, except that no rocks or stones shall be placed in fill area under structures.

B. PLACEMENT:

1. The backfill and fill materials shall be evenly placed adjacent to structures, piping or conduit to the required elevations. Care shall be taken to prevent wedging action of backfill against structures or displacement of piping or conduit by carrying the material uniformly around the structure, piping or conduit to approximately the same elevation in each lift.

2. Where fill is required on both sides of a foundation or wall, the fill shall be placed simultaneously on each side. Fill against building walls shall not be placed until the first floor slab has been poured and set.

3. Fill against other work shall be in a manner and at such time as not to endanger the stability or damage the work. No fill shall be placed against water bearing walls until they have been tested for watertightness. No fill shall be placed over snow or frozen material.

4. Materials such as brush, hedge, roots, stumps, grass, and other organic matter shall not be incorporated or buried in the engineered fill.

C. COMPACTION:

1. Compaction of backfill and embankment material shall be accomplished by mechanical means such as vibratory plates or rollers. Compaction by jetting methods will not be performed unless specifically allowed by the City. No backfill shall be deposited or compacted in water.

2. Backfill shall be placed in 8 inch loose layers and each layer compacted to not less than 95 percent of maximum dry density; the moisture content shall be within two percentage points of optimum as determined by ASTM D-698.

3. Granular fill under slabs shall be placed after the subgrades have been leveled and cleared of all debris and immediately prior to pouring of the slab. Granular material shall be placed in 8 inch loose layers and each layer compacted to not less than 98 percent of maximum dry density; the moisture content shall be with 2 percentage points above optimum as determined by ASTM D-698.

3.04 COMPACTION TESTING:

A. Sampling and testing shall be the responsibility of the Contractor. Tests shall be performed by an approved commercial testing laboratory or may be tested with approved facilities furnished by the Contractor. All test results shall be submitted to the City.

B. Laboratory tests for moisture-density relations shall be determined in accordance with ASTM D-698. A minimum of one test shall be performed on each different type of material used for backfill.

C. Field In-Place Density Tests:

1. The Contractor shall perform a sufficient number of compaction density tests to demonstrate that the required compaction requirements are being met. In general a minimum of one (1) satisfactory compaction test shall be performed for each cumulative lift length of 400 feet. Upon failure of a test, the lift shall be recompacted and retested. Additional tests will be required if the first tests consistently fail, if material changes, or if the Contractor's method of compaction changes.

2. Density tests shall be determined in accordance with ASTM D-1556, ASTM D-2167 or ASTM D-2922. When ASTM D-2922 is used, the calibration curves shall be checked and adjusted using only the sand cone method as per ASTM D-1556. ASTM D-2922 results in a wet unit weight of soil and when using this method, ASTM D-3017 shall be used to determine the moisture content of the soil. The calibration curves furnished with the moisture gages shall be checked along with density calibration checks as described in ASTM-D3017. The calibration checks of both the density and moisture gages shall be made at the beginning of a job and on each different type of material encountered. Copies of calibration curves and results of calibration tests shall be furnished to the City.

SECTION C - TRENCHING AND BACKFILLING FOR UTILITIES

PART 1 - GENERAL

1.01 DESCRIPTION: This work includes, but is not necessarily limited to excavation and backfilling for all sewer lines, water lines, power and instrumentation cables and other utilities as shown on the drawings.

1.02 QUALITY ASSURANCE:

Testing and inspection services as required by this section shall be provided by the Contractor. Tests will include hand auger probing, field density tests for verifying the degree of compaction and excavation inspections to determine the limits of unsuitable material to be removed.

1.03 REFERENCES:

A. American Society of Testing Materials (ASTM) Publications:

1.	ASTM D-698	Moisture - Density Relations of Soils Using 5.5-lb. Rammer and 12-inch Drop.
2.	ASTM D-1556	Density of Soil in Place by the Sand Cone Method.
3.	ASTM D-2167	Density of Soil in Place by the Rubber Balloon Method.
4.	ASTM D-2922	Density of Soil and Soil-Aggregate in Place by Nuclear Methods (Shallow Depth).
5.	ASTM D-3017	Moisture Content of Soil and Soil-Aggregate in Place by Nuclear Methods (Shallow Depth).

B. Indiana Department of Transportation (INDOT) Publication: Latest edition of Standard Specifications.

C. Occupational Safety and Health Administration (OSHA) Standards 29 CFR Part 1926 including Subparts A,B,C,D and P.

1.04 CARE OF EXISTING STRUCTURES AND PROPERTY:

A. All poles, fences, sewer, gas, water, drainage or other pipes, wires, conduits, manholes, buildings, structures and property in the proximity of any excavation shall be supported and protected from damage by the Contractor during construction.

B. Wherever sewer, gas, water, drainage or other pipes or conduits cross the excavation, the Contractor shall support said pipes and conduits without damage to them and without interrupting their use during the progress of the work.

C. All property shall be thoroughly cleaned of all surplus materials, earth and rubbish placed thereon by the Contractor.

D. Any damage to poles, fences, sewer, gas, water, drainage or other pipes, wires, conduits, manholes, buildings, structures and property resulting from the Contractor's work shall be promptly repaired by the Contractor. The quality of all such repair work shall be to the satisfaction of the City and the owner of said utility or structure.

1.05 EXISTING UNDERGROUND STRUCTURES AND UTILITIES:

A. The Contractor shall notify the appropriate utility companies at least seventy-two (72) hours prior to the start of construction.

1. The utility companies will locate any existing underground utilities and structures within the site limits.

2. The Contractor, prior to the start of construction, shall verify the location of any existing underground utilities and structures within the site limits. It is the Contractor's responsibility to make any and all exploratory investigation which may be necessary to verify or locate the utility pipes, wires, structures and appurtenances of others.

PART 2 - MATERIALS

2.01 BACKFILL MATERIALS:

A. Granular material, where required, shall comply with Article 211.02 of the INDOT Standard Specifications. Maximum stone size shall not exceed 1 inch or the maximum size recommended by the pipe manufacturer, whichever is smaller.

B. General backfill material shall contain no more than 5% organic material, no particles larger than four (4) inches and shall be free of trash, rubble and debris. Excavated material meeting these requirements can be used as general backfill.

C. Crushed stone material shall be No. 53 complying with Article 904.02 of the INDOT Standard Specifications.

PART 3 - EXECUTION

3.01 GENERAL:

All work shall conform to the requirements of all local, state and federal agencies having jurisdiction and the requirements of these specifications.

3.02 GENERAL TRENCHING:

A. Not more than 300 feet of trench shall be opened at any time with not more than 100 feet opened in advance of the completed pipe laying operation.

B. Surface encumbrances, located so as to create a hazard to employees involved in excavation work or in the vicinity thereof at any time during operations, shall be removed or made safe before excavating is begun.

C. During excavation, material satisfactory for backfilling shall be stockpiled in an orderly manner at a distance from the banks of the trench sufficient to avoid overloading and to prevent slides and cave-ins. Adequate drainage shall be provided for the stockpiles and surrounding areas by means of ditches, dikes, or other suitable methods. The stockpiles shall also be protected from contamination with unsatisfactory excavated material or other material that may destroy the quality and fitness of the suitable stockpiled material.

D. Grading shall be done as may be necessary to prevent surface water from flowing into the excavation, and any water accumulating therein shall be removed so that the stability of the bottom and sides of the excavation is maintained. In wet trenches dewatering equipment shall be operated ahead of pipe laying and the water level kept below the pipe invert.

E. Excavation work shall be performed in accordance with all applicable provisions of the OSHA standards for trench and excavation safety and as recommended by the pipe manufacturer.

F. Excavation for manholes or similar structures shall be sufficient to leave at least 12 inches clear between the outer structure surfaces and the face of the excavation or support members and be of sufficient size to permit the placement and removal of forms for the full length and width of structure footings and foundations. When concrete is to be placed in an excavated area, special care shall be taken not to disturb the bottom of the excavation. Excavation to the final grade level shall not be made until just before the concrete is to be placed.

G. Dust conditions shall be kept to a minimum by the use of water. The use of salt, or calcium chloride will not be permitted.

3.03 ROCK EXCAVATION:

A. The Contractor shall excavate rock, if encountered, to the lines and grades indicated on the drawings, shall dispose of the excavated material, and shall furnish acceptable materials for backfill in place of the excavated rock.

B. In general, rock in pipe trenches shall be excavated so as to be not less than 6 inches from the pipe after it has been laid. Before the pipe is laid, the trench shall be backfilled to the correct subgrade with thoroughly compacted suitable material.

3.04 REMOVAL OF EXCAVATED MATERIAL:

A. As trenches are backfilled, the Contractor shall remove all surplus material, regrade and leave clear, free, and in good order all roadways and sidewalks affected by the construction. During the progress of and until the expiration of the guarantee period, he shall maintain in good and safe conditions the surface or any street over the trenches and promptly fill all depressions over and adjacent to trenches caused by settlement of backfilling.

B. Surplus or unsatisfactory excavated soil materials shall be properly disposed of off site.

C. Excavated rock shall be disposed off the site limits unless otherwise approved by the City.

3.05 PAVEMENT REMOVAL: Where necessary, the Contractor shall remove existing street pavements, driveways, curbs and sidewalks to the minimum width necessary to accommodate the sewer construction work. Asphalt and concrete surfaces shall be cut and removed to straight lines parallel to the trench.

3.06 CLEARING AND REPLACING TOPSOIL: The site of all open cut excavations shall be cleared of obstructions preparatory to excavation. On all public or private property where grants of easements have been obtained, the Contractor shall remove and keep separate the topsoil, and shall carefully replace it after the backfilling is completed. In lieu of replacing the original topsoil, the Contractor may furnish and place "borrow" topsoil as specified in Section D of this Article.

3.07 PROTECTION AND CARE OF EXISTING FACILITIES: All poles and overhead utility wires, fences, sidewalks, curbs, signal lights, mail boxes, road or street signs, culverts, building, and other surface structures shall be protected and preserved by the Contractor and shall be repaired, replaced or otherwise restored to a condition equal to or better than they were before the work was started. All water and gas mains and services; sewers and sewer services; drains, petroleum pipes, buried electric, telephone, television, telegraph and signal cables and conduits; manholes, storm water inlets, foundations and other subsurface structures shall be properly supported and protected during construction and left in a condition equal to or better than they were before the work started. Fire hydrants shall remain accessible to fire department personnel at all times.

3.08 STRUCTURES ENCOUNTERED:

A. The Contractor shall contact the Owners of the various utilities or facilities in the project area prior to the start of construction for the location of the various utilities or facilities. The Contractor shall take the necessary steps and actions to determine the exact location of underground utilities and facilities, and shall exercise sufficient care during construction to prevent damage to said utilities and facilities.

B. If, during the course of construction, it becomes necessary to relocate any water main, gas main, telephone cable or conduit, cable television, or electric line, it shall be the responsibility of the utility company involved to make the necessary relocation. However, the Contractor shall assume all risk and liability for any inconvenience, delay, or damage sustained by him due to any interference from the said underground utility or the operations of moving them.

C. Where existing sanitary and storm sewers exist which are in conflict with the construction of the proposed pipe, the Contractor shall relocate, or temporarily remove and reconnect said conflicting sewers. Contractor shall be responsible for properly handling any flow in said sanitary or storm sewers during his work. In either case, sewer shall be returned to a condition equal to or better than the condition at the start of construction.

D. All culverts, which are in conflict with the construction shall be relocated, or temporarily removed and relocated. Contractor shall be responsible for properly handling any flow through said culverts during his construction.

3.09 COVERING ENDS: Before leaving the work for the night, during a storm, or for any other reason, care must be taken that the unfinished end of any pipe is securely closed with a tightly fitting cover or plug. Any earth or other material that may find entrance into the pipe, through any such open end of an unplugged pipe shall be removed at the Contractor's expense.

3.10 STABILIZATION: If portions of the bottom of trenches or excavations consist of material unstable to such a degree that, it cannot adequately support the pipe or structure, the bottom shall be overexcavated and stabilized with granular material in compliance with Articles 211.02 and 211.04 of the INDOT Standard Specifications.

3.11 SHEETING AND BRACING:

A. Sheeting and bracing shall be placed in the trench, as may be necessary for the safety of the work and public, for the protection of the workmen, adjacent properties, and for the proper installation of the work in accordance with all applicable provisions of the OSHA standards.

B. Sheeting and/or bracing shall be progressively removed as the backfill is placed in such a manner as to prevent the caving in of the sides of the trench or excavation, and to prevent damage to the work.

C. Sheeting which is placed for the protection of the public, adjacent properties, or structures shall not be removed until the backfill has been placed and thoroughly compacted. While being removed, all vacancies left by this sheeting shall be carefully filled with sand free from silt, rammed into place, puddled or otherwise firmly compacted.

3.12 PIPE BEDDING:

A. Each pipe section shall be laid on a firm foundation of bedding material, haunched, and backfilled as detailed herein.

B. Rigid pipe materials such as concrete or ductile iron shall be bedded with well graded gravel conforming to the requirements of ASTM C33, Gradation 67. Materials meeting this requirements include No. 8 coarse aggregate as specified by Section 904.02 of the INDOT Standards.

C. Flexible pipe materials including Poly Vinyl Chloride (PVC) shall be installed and bedded in accordance with the lastest revision of ASTM D2321 using a Class 1B embedment material.

D. The bedding material shall be spread the full width of the trench bottom. The bedding material shall be so placed as to fill the space under the lower part of the pipe to provide full length pipe support.

3.13 BACKFILLING:

A. Trenches shall be backfilled to existing grade or grades as shown on the plans. The trenches shall be backfilled to at least 2 feet above the top of pipe prior to performing required pressure tests for water lines. Joints and couplings shall be left uncovered during pressure tests. Remaining backfill shall not be placed until all specified pressure tests are performed.

B. Backfilling of utility lines not located within roadway limits, sidewalk areas, and driveways shall consist of tamping 6 inch layers of general backfill (as defined herein) until the pipe has a minimum of 12 inches of cover. The remainder of the backfill may be carefully placed in the trench and mounded above finish grade to allow for settlement until final grading and restoration is accomplished. The top 4 inches shall contain no stones or objects larger than 1 inch maximum dimension. The Contractor shall be responsible for maintaining the trench to final grade until settlement has ceased or for a maximum of one year.

C. All backfill under or within 2 feet of any roadway, driveway shoulder or sidewalk shall be granular backfill as described herein.

The method of backfilling under a roadway shall consist of placing granular backfill in maximum 8" layers, loose measurement, and then each layer shall be mechanically compacted to the required density. The method of granular backfill installation shall be as defined in Section 211.03, 211.04 and 211.05 of the Indiana Department of Transportation Standard Specifications, latest edition. All backfill shall be compacted to 95% of maximum density. Where excavation occurs within the right-of-way of a state highway, all areas within 12 feet of the edge of pavement shall be backfilled with granular backfill.

3.14 COMPACTION TESTING:

A. Sampling and testing shall be the responsibility of the Contractor. Tests shall be performed by an approved commercial testing laboratory or may be tested with approved facilities furnished by the Contractor.

B. Laboratory tests for moisture-density relations shall be determined in accordance with ASTM D-698. A minimum of one test shall be performed on each different type of material used for backfill.

C. Field In-Place Density Tests:

1. Shall be performed in sufficient numbers to ensure that the specified compaction is being obtained. A minimum of one test per lift of backfill for every 500 feet of installation shall be performed.

2. Shall be determined in accordance with ASTM D-1556, ASTM D-2167 or ASTM D-2922. When ASTM D-2922 is used, the calibration curves shall be checked and adjusted using only the sand cone method as per ASTM D-1556. ASTM D-2922 results in a wet unit weight of soil and when using this method, ASTM D-3017 shall be used to determine the moisture content of the soil. The calibration curves furnished with the moisture gauges shall be checked along with density calibration checks as described in ASTM-D3017. The calibration checks of both the density and moisture gauges shall be made at the beginning of a job and on each different type of material encountered.

D. All test results shall be submitted to the City.

E. Trenches improperly compacted shall be reopened and then refilled and compacted to the density specified. Field in-place density tests shall also be repeated for improperly compacted trenches that are reopened, refilled and recompacted.

SECTION D - TOPSOIL

PART 1 - GENERAL

1.01 DESCRIPTION: The work of this section consists of surface preparation and placement of topsoil on all areas to receive seeding and/or planting.

PART 2 - PRODUCTS

2.01 MATERIAL SOURCE: Topsoil material shall be supplied from on site stockpiles as specified in Sections B and C and/or off site sources and shall meet the requirements specified below.

2.02 TOPSOIL:

1. Topsoil shall consist of natural, fertile, agricultural soil capable of sustaining plant and lawn growth. The material shall be free of stones 2" or larger, stumps, clay lumps, roots, brush or other objectionable materials.

2. The topsoil or soil mixture shall have a pH range of 5.6 to 7.6, or adjusted to this range by addition of agricultural limestone.

PART 3 - EXECUTION

3.01 PREPARATION: Immediately prior to dumping and spreading topsoil on any area, the surface shall be loosened or disced to a minimum depth of 2" to facilitate bonding of the topsoil to the covered subgrade soil.

3.02 INSTALLATION: After surface preparation, topsoil shall be evenly spread to a minimum finished depth of 6" for seeded areas and 8" for planting areas. The topsoil surface shall conform to the required lines and grades as shown on the plans.

SECTION E - MULCHED SEEDING

PART 1 - GENERAL

1.01 DESCRIPTION: The work of this section consists of mulched seeding and includes furnishing and placing seed, fertilizer, agricultural limestone, and mulch in a prepared seed bed as specified herein. Seeding shall be required in all areas disturbed by construction unless otherwise designated for alternative surfacing.

PART 2 - PRODUCTS

2.01 GENERAL: All materials as noted shall be in accordance with Section 621 of the Indiana Department of Transportation (IDOT) Standard Specifications, latest edition.

2.02 SEED: In all residential areas or privately maintained areas, the seed mixture shall be Type "U" as per Section 621.05. Where seeding is required on slopes 3:1 or steeper, Type "CV" seed mixture shall be used. In all other areas where seeding is required, the mixture shall be Type "R" as per section 621.05.

2.03 FERTILIZER: Fertilizer shall be standard commercial fertilizer with an analysis of 12-12-12.

2.04 AGRICULTURAL LIMESTONE: Agricultural limestone shall be in accordance with Section 914.02 of the IDOT Standard Specifications.

2.05 MULCH: Mulch shall comply with Section 914.05(a) of the IDOT Standard Specifications except that wood cellulose fiber mulch will not be allowed.

PART 3 - EXECUTION

3.01 INSTALLATION

A. The work shall be performed in accordance with all applicable provisions of Section 621.03 and 621.04 of the IDOT Standard Specifications.

B. Mulch seeding shall be performed only between February 1 and October 16 unless otherwise approved by the City.

C. All water used shall be obtained from fresh water sources, preferably potable water, and free of harmful chemicals.

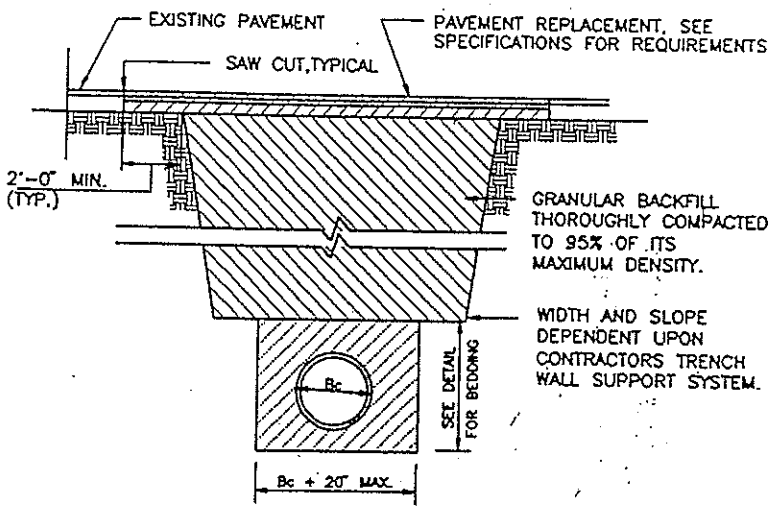

TRENCH AND BACKFILL UNDER PAVEMENT

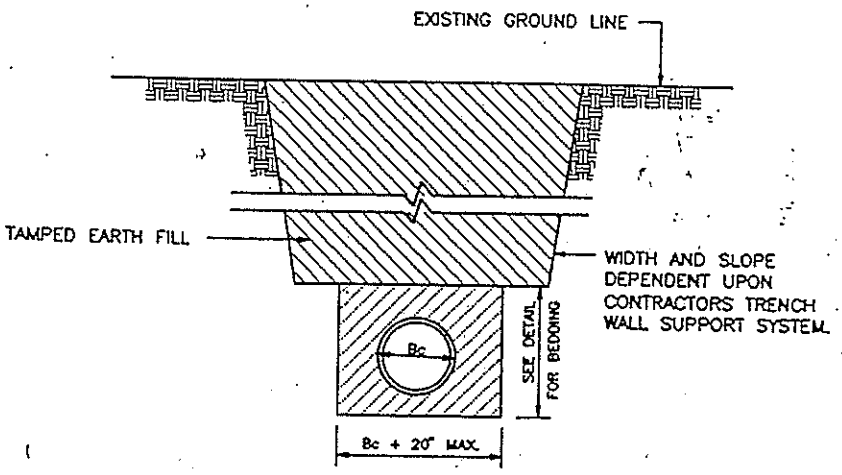

TRENCH AND BACKFILL OUTSIDE OF PAVEMENT

UTILITY TRENCH DETAIL

City of Madison
Figure I-1

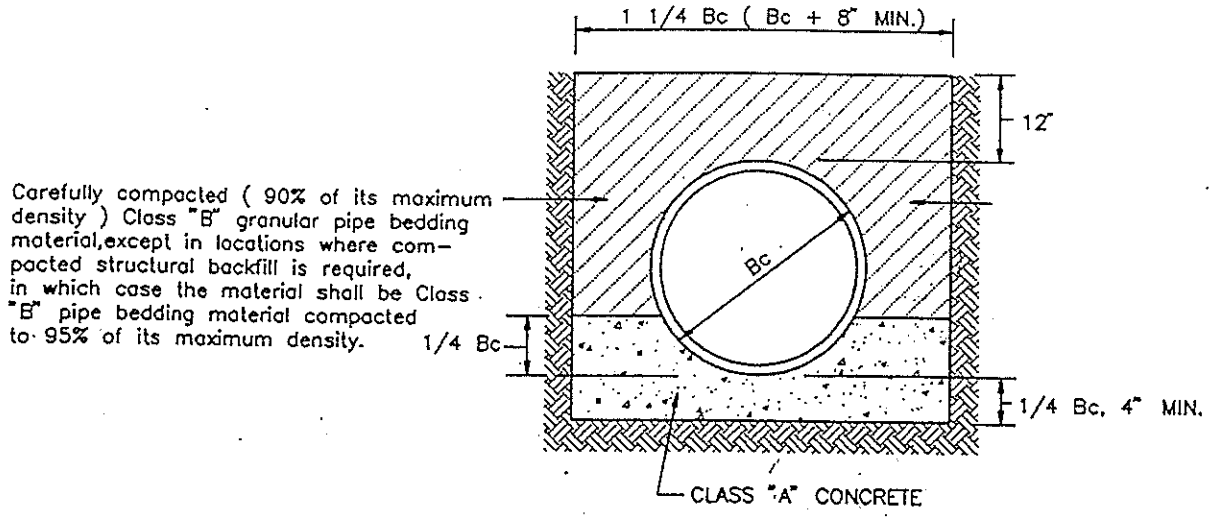

CLASS "A" BEDDING

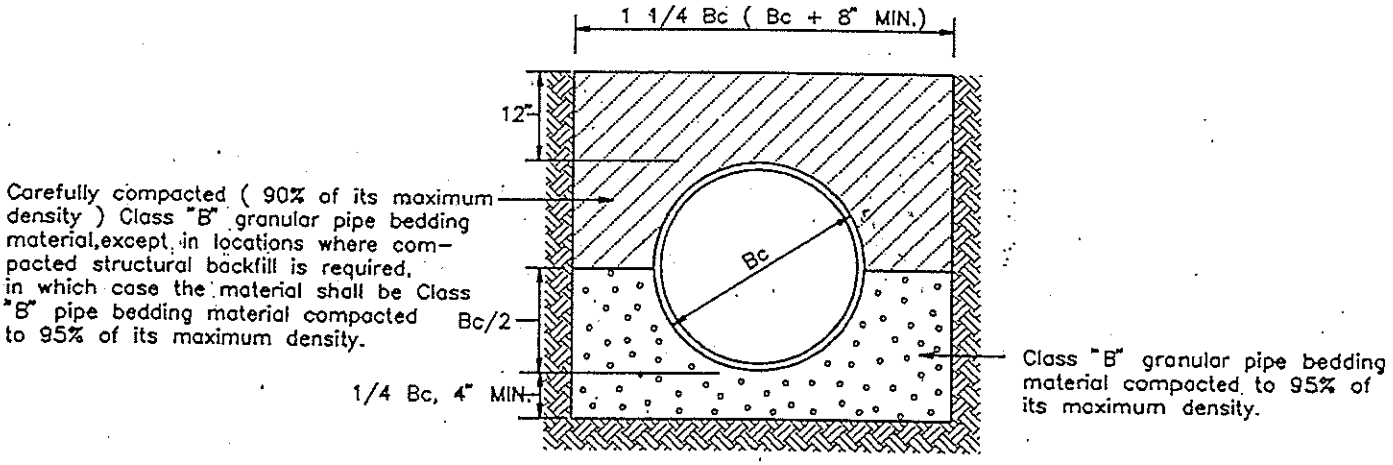

NOTE: IN ROCK TRENCH, EXCAVATE AT LEAST 6" BELOW THE BELL OF THE PIPE.

CLASS "B" BEDDING

PIPE BEDDING DETAIL

City of Madison
Figure I-2

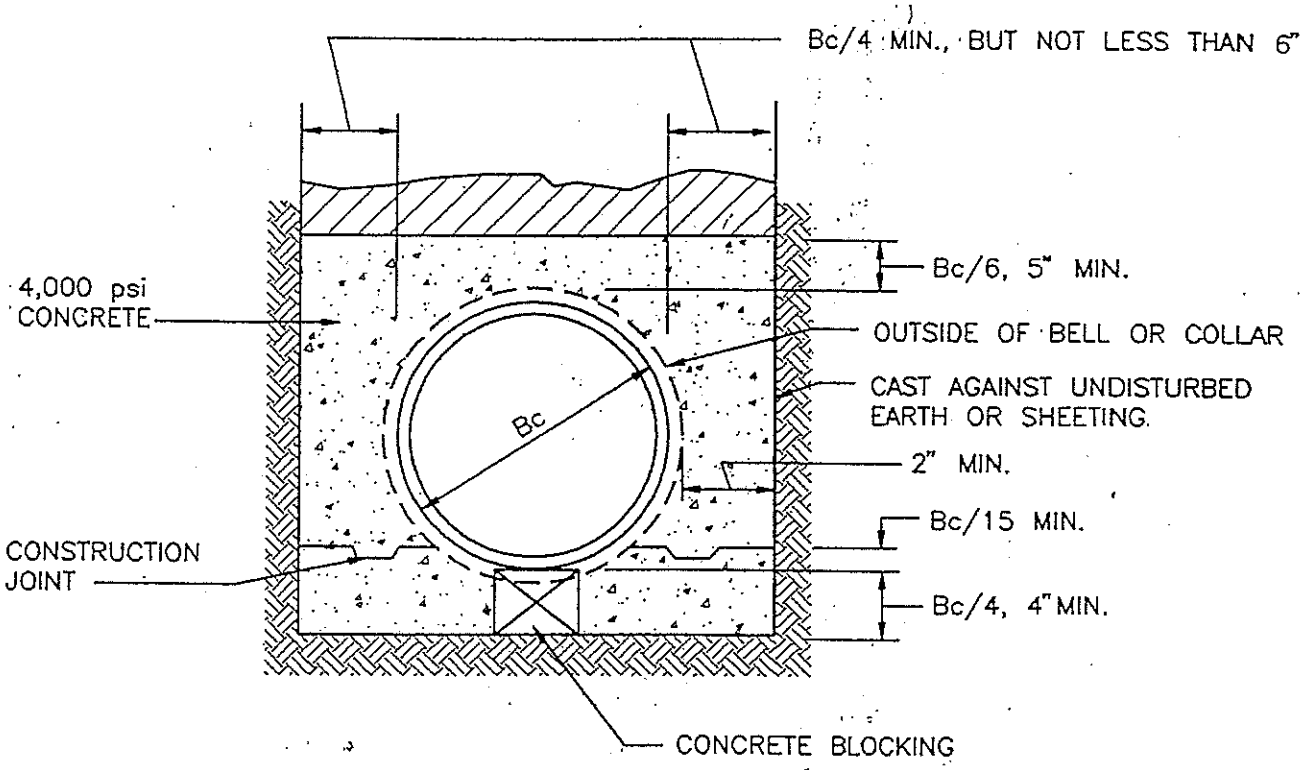

CONCRETE ENCASEMENT DETAIL

City of Madison
Figure I-3

ARTICLE II - SANITARY SEWER SYSTEMS

SECTION A - GRAVITY SANITARY SEWERS

PART 1 - GENERAL

1.01 DESCRIPTION:

Work under this section includes the installation and testing of gravity sanitary sewer pipe, fittings, and connections.

1.02 QUALITY ASSURANCE:

A. All similar components shall be manufactured and furnished by one manufacturer.

B. Only one type of pipe may be used for the project unless otherwise approved by the City. The Contractor shall select one type of pipe from those listed in this specification.

PART 2 - PRODUCTS

2.01 POLYVINYL CHLORIDE PIPE

A. PVC Pipe 4" through 15" in diameter.

1. All PVC Pipe 4" through 15" in diameter shall conform to ASTM D1784, "Rigid Poly (Vinyl Chloride) and Chlorinated Poly (Vinyl Chloride) Compounds" and either:

   a. ASTM F794, "Poly (Vinyl Chloride) (PVC) Ribbed Gravity Sewer Pipe and Fittings Based on Controlled Inside Diameter",

   b. ASTM F949, "Poly (Vinyl Chloride) (PVC) Corrugated Sewer Pipe with a Smooth Interior and Fittings", or

   c. ASTM D3034, "Type PSM Poly (Vinyl Chloride) (PVC) Sewer Pipe and Fittings".

   d. ASTM F-789 Type PS-46 Poly (Vinyl Chloride) (PVC) Plastic Gravity Flow Sewer Pipe and Fittings.

2. PVC sewer pipe shall be SDR 35 with cell classification of 12454-B or 12454-C.

3. Pipe joints shall be push-on type conforming with ASTM D3212, "Joint for Drain and Sewer Plastic Pipes Using Flexible Elastomeric Seals".

B. Gaskets shall be factory installed and chemically bonded to the bell end of the pipe.

C. Each pipe shall be identified with the name of manufacturer, nominal size, cell classification, ASTM designation, Uni-Bell Plastic Pipe Association designation, the pipe stiffness designation, and the manufacturer's date code.

2.02 DUCTILE IRON PIPE:

A. Ductile iron pipe shall be centrifugally cast in metal or sandlined molds and shall conform to the latest revisions of ANSI/AWWA C150/A21.50 and ANSI/AWWA C151/A21.51. Ductile iron pipe shall be Pressure Class 250 minimum. The interior surface of the ductile iron pipe and fittings shall be polyethylene line in accordance with ANSI/ASTM D1248. The minimum lining thickness shall be 35 mils.

B. When used for underground service, ductile iron pipe shall have polyethylene encasement around the pipe exterior conforming to the latest revision of ANSI/AWWA C105/A21.5.

C. Pipe joints and accessories shall be of the type shown and shall conform to the following requirements and standards:

1.	Push-on Joints	ANSI/AWWA C110/A21.10 ANSI/AWWA C111/A21.11
2.	Mechanical Joints	ANSI/AWWA C110/A21.10 and ANSI/AWWA C111/A21.11
	a. Bolts and Nuts	ANSI/AWWA C111/A21.11; tee-head bolts and hexagonal nuts.
	b. Gaskets	ANSI/AWWA C111/A21.11

3.	Flanged Joints	ANSI/AWWA C111/A21.10, 250 psi working pressure rating and drilled to ASA 125 pounds standards.
	a. Bolts	Table 1 10.14 of ANSI/AWWA C110/A21.10. ASTM A307, Grade B with heavy hex head. ANSI B18.2.1 as per Appendix A Attached to ANSI/AWWA C110/A21.10.
	b. Nuts	ASTM A307, Grade B, heavy hex; ANSI B18.2.2 as per Appendix A attached to ANSI/AWWA C110/A21.10.
	c. Gaskets	Full face or ring type, 1/8" thick, vulcanized natural or synthetic rubber, free of porous areas, foreign materials, and visible defects as per Appendix A attached to ANSI/AWWa C110/A21.10.

D. Pipe fittings shall be short body pattern designed in accordance with ANSI/AWWA C110/A21.10. Fittings for pipe up to 12 inches in diameter shall be pressure Class 250 and pipes 14 inches and larger shall be pressure Class 150.

E. Blind flanges, companion flanges and flange fillers shall conform to ANSI B16.1, Class 125.

PART 3 - EXECUTION

3.01 GENERAL CONSTRUCTION REQUIREMENTS:

A. Before installing piping, the Contractor shall carefully verify location, depth, type of joint needed and size of pipe to which connection is proposed. Contractor shall assure that the lines can be run as contemplated without interfering with footings, walls, other piping, fixtures, etc.

B. All lengths of pipe shall be dimensioned accurately to measurements established at the site and shall be worked into place without springing or forcing. Cut sections of pipe shall be reamed to remove all burrs.

C. Utmost care shall be exercised in transporting and handling all pipe, fittings, valves, etc., in order to avoid shock and damage to pipe and coatings. Lifting shall be by hoist or skids when hand lifting is not feasible. Droppings will not be permitted. Pipe handled on skidways must not be skidded or rolled against pipe already on the ground. Damaged or defective pipe and appurtenances shall be replaced.

D. The pipe shall be thoroughly cleaned before being laid and kept clean during construction.

E. The Contractor shall cut all pipe and drill all holes that may be necessary.

3.02 PIPE LAYING:

A. The laying of pipe on the prepared bedding material shall commence from the lowest point, with the spigot ends pointing in the direction of flow. All pipes shall be laid true to line and grade. They shall be carefully centered so that when laid, they form a sewer with uniform invert.

B. A pipe plug or bulkhead shall be used whenever pipe laying operations are not in progress as required to protect the pipe ends from foreign material.

C. Before making pipe joints, all surfaces of the joints shall be clean and dry. Lubricants, primers and adhesives shall be used in accordance with the manufacturer's recommendations. The pipe shall then be placed, fitted and adjoined so as to obtain a watertight joint. In the event that previously laid pipe is disturbed, it shall be removed and relaid.

D. The Contractor shall assure proper alignment and grade by the proper use of lasers, batter boards, surveying instruments or other suitable means.

3.03 LEAKAGE TESTS:

A. Prior to acceptance, all gravity sewers and manholes, including service laterals, shall be tested and pass a test for leakage. The Contractor shall furnish all labor, materials, and equipment required for making the tests and groundwater level determinations. Testing shall not be performed until backfilling and compaction are completed.

All gravity sewers shall pass one of the three following leakage tests as further specified by this section:

1. Low Pressure Air Test conforming to the requirements of the latest revision of ASTM C828 and ASTM C924 as minimum. The Low Pressure Air Test shall be used unless an Infiltration or Exfiltration Test is approved by the Engineer.

2. Infiltration Test with a maximum inward leakage of 100 gallons per inch of pipe diameter per mile per day.

3. Exfiltration Test with a maximum outward leakage of 100 gallons per inch of pipe diameter per mile per day.

In addition, the Contractor shall be required to measure the groundwater table where required and to perform a manhole leakage test (either exfiltration or infiltration).

The Contractor shall notify the City at least 48 hours in advance of any leakage tests as required to permit the City to witness such testing. Documentation of leakage tests and their results shall be kept by the Contractor with two (2) copies submitted to the City upon completion and passage.

B. Determination of Groundwater Level:

Prior to and during all testing, the Contractor shall determine groundwater levels by backfill groundwater gauges or by manhole groundwater gauges. In general a sufficient number of groundwater gauges shall be installed to determine groundwater levels in the area of the sewers being tested.

In the case of newly installed groundwater gauges or the attachment of the temporary clear plastic tubing in the manhole groundwater gauge, the level of groundwater shall be allowed to stabilize before determining the groundwater level.

C. Pipeline Testing:

1. Low Pressure Air Test:

Immediately prior to testing, the pipe shall be cleaned. After cleaning, all pipe outlets shall be plugged. The Contractor must be aware that low-pressure air testing may be dangerous. The Contractor shall review the paragraphs entitled "Safety Precautions" in ASTM C828 and ASTM C924 before beginning pressurization of the pipe. The sewer line shall then be slowly pressurized to an internal pressure of 4.0 psig greater than the hydrostatic pressure head created by any groundwater over the pipe (i.e., the height of groundwater above the invert of the pipe, in feet, multiplied by 0.43). Where such internal pressure adjustment would result in a starting pressure greater than 9.0 psig, an Infiltration Test shall be performed. The method of pressurizing shall be such that the pressure shall be maintained until the temperature of the pipe and the air have equalized but in no case less than five minutes. After the temperature has stabilized, the air supply shall be discontinued and the pressure allowed to drop. When the pressure reaches 3.5 psig (not including additional air

pressure required by groundwater), a stopwatch shall be used to record the time it takes for the pressure to drop to 2.5 psig (or a 1 pound pressure drop). If the recorded time is more than the minimum test time as computed using Table 1 below, the section of pipe shall be considered to have passed the leakage test. If the recorded time is less than the minimum test time, the line shall be considered to have failed the test, shall be inspected for possible leaks and retested upon correction until such time as the line passes the requirements.

TABLE 1

LOW PRESSURE AIR TEST
MINIMUM TEST TIME FOR PRESSURE TO DROP FROM
3.5 TO 2.5 PSIG

Nominal Pipe Diameter, Inches	Minimum Test Time, Minutes per 100 Feet
4	0.3
6	0.7
8	1.2
10	1.5
12	1.8
15	2.1
18	2.4
21	3.0
24	3.6
27	4.2
30	4.8
33	5.4
36	6.0
39	6.6
42	7.3

2. Infiltration Test:

An infiltration test shall be used only when approved by the City or when the starting pressure for the Low Pressure Air Test would be greater than 9.0 psig. For an infiltration test to be performed, the ground water elevation must be at least 2.0 feet above the crown of the upstream pipe. The test shall require cleaning of the line and then plugging the upstream pipe opening with a watertight plug with length equal to or greater than the pipe diameter.

A 90° V-Notch weir shall be placed in the downstairs manhole of the section of pipe being tested. When performing an infiltration test with a weir, sufficient time shall be allowed for the infiltration to crest the weir and stabilize. This time shall be determined based on the allowable infiltration, the size of the sewer line, the slope of the line, and other pertinent information. In no case shall the time be less than one hour. The Contractor shall measure the head (H) of water flowing over the weir. The measurement must be accurate and taken a minimum distance of 18" or four time the height of H upstream of the weir, whichever is greater. The measured infiltration over the weir can be calculated as:

$$Q = 3240\ H^{2.5}$$

where H is in inches and Q is in gallons per day.

Where the infiltration allowances are very small, and measurement by weir inaccurate, the leakage measurement shall be made by timing the filling of a container of known volume. The volume collected shall be converted to to a 24-hour basis for comparison with specification requirements. If the measured infiltration is less than that allowed by Table 2 below the pipe section shall be considered to have passed the leakage test.

TABLE 2

INFILTRATION AND EXFILTRATION TESTS
ALLOWABLE INFILTRATION OR EXFILTRATION BASED ON
100 GALLONS PER DAY PER INCH OF PIPE DIAMETER PER MILE OF PIPE

SEWER PIPE REQUIREMENTS	
Nominal Pipe Diameter, Inches	Allowable Infiltration/Exfiltration, Gallons Per Foot of Pipe Per Hour
4	0.0032
6	0.0047
8	0.0063
10	0.0079
12	0.0095
15	0.0118
18	0.0142
21	0.0166
24	0.0189
27	0.0213
30	0.0237
36	0.0284
42	0.0331
48	0.0379

MANHOLE REQUIREMENTS

Nominal Manhole Diameter, Inches	Allowable Infiltration/Exfiltration, Gallons Per Vertical Foot Per Hour
48"	0.0379
60"	0.0473
72"	0.0568

3. Exfiltration Test:

An exfiltration test may only be performed in lieu of a low pressure air test only as approved by the City.

Before beginning the exfiltration test, the pipe shall be cleaned. Once cleared,t he downstream pipe out let shall be sealed at the manhole with watertight plug. To assure a proper seal, the plug shall be at least equal to the diameter of the pipe being tested. (Note that if service laterals were connected, any opening lower in elevation than the static water level will also have to be plugged).

The upstream manhole shall then be filled with water to a static level not lower than four (4) feet above the top of the sewer pipe (at its highest point) and not less than four (4) feet higher than the existing ground water table, whichever is greater. In lieu of using the upstream manhole, a standpipe can be used to develop the specified pressure head.

The water shall be allowed to stand for a period long enough to allow water absorption into the pipe (a minimum of 6 hours). After the absorption period, the pipe shall be refilled to the established level and the test begun. After a one hour period, the exfiltrated volume shall be calculated by either measuring the drop in water level in the manhole or measuring the volume of water required to refill the standpipe to the original level, whichever applies. The measured exfiltration rate shall then be calculated and compared with the allowable exfiltration. If the measured exfiltration is less than that allowed by Table 2, the pipe tests, failure to meet the required limits will require correction, repair and retesting of the line.

3.03 DEFLECTION TESTING:

A. Deflection testing shall be performed by the Contractor in the presence of the City or its representative on all plastic pipes with nominal inside diameters of 6-inches or greater. Deflection testing shall be accomplished using one of the following devices: calibrated television or photography, or a properly sized "go, no go" mandrel or sewer ball. Deflections of no more than 5% based on the base inside diameters shown below will be allowed:

Table 1: Allowable Deflection

Nominal Size, in.	Base Inside Diameter, in.	5% Deflection Mandrel, in.
6	5.742*	5.45
8	7.665*	7.28
10	9.563*	9.08
12	11.361*	10.79
15	13.898*	13.20
18	16.976**	16.13
21	20.004**	19.00
24	33.480**	21.36
27	25.327**	24.06

* From Table 69 of the Handbook of PVC Pipe, the Uni-Bell PVC Pipe Association, 1982 and/or Table X1.1 of ASTM Specification D3034.

** From Table 70 of the Handbook of PVC Pipe, the Uni-Bell PVC Pipe Association, 1982.

B. The deflection test shall be performed no sooner than 30 days following installation of the pipe (including backfill). Prior to testing, the pipeline shall be thoroughly cleaned.

C. Prior to acceptance, pipes having deflections greater than 5% shall be excavated, rebedded and/or replaced and retested (successfully).

D. The Contractor shall submit deflection test reports to the City within 30 days after performance of each said test. A separate report shall be submitted for each manhole to manhole sewer section. This report shall provide all pertinent data regarding the test including, but not limited to, the date of the test, details of the testing device used, diameter of the pipe, the date installation of the line was completed including backfill, and whether the line passed or failed the test.

SECTION B - SANITARY SEWER FORCE MAINS

PART 1 - GENERAL

1.01 DESCRIPTION: The work of this section includes the supply of all materials, labor, and equipment required for the installation and testing of sanitary sewer force mains. Force main piping inside of structures such as lift stations and valve pits is specified under Section D of this Article.

1.02 QUALITY ASSURANCE:

A. All materials shall be new and unused, supplied by a single manufacturer where possible.

B. All pipe and fittings shall be of similar materials as allowed by these specifications.

PART 2 - PRODUCTS

2.02 POLYVINYL CHLORIDE (PVC) PIPE:

A. Pipe - All PVC pressure pipe shall meet the requirements of either AWWA C900, DR14 (Class 200) or ASTM D2241, SDR-21 (200 PSI). PVC pipe shall have a cell classification of 12454B or 12454C. All PVC pressure pipe and fittings shall be marked indicating appropriate ASTM or AWWA designation and pressure class.

B. Pipe Joints - All PVC pipe joints shall be bell and spigot type with elastomeric gaskets conforming to the requirements of ASTM D3137.

2.03 DUCTILE IRON PIPE:

A. Pipe - All ductile iron pipe shall be manufactured in accordance with ANSI/AWWA C150/A21.50 and ANSI/AWWA C151/A21.51. Pipe shall be Pressure Class 350 for pipes 12" and smaller and Pressure Class 250 for pipes 14" and larger. All ductile iron pipe and fittings shall be cement mortar lined and seal coated in accordance with ANSI/AWWA C104/A21.4.

B. Fittings - All ductile iron pipe fittings shall be manufactured in accordance with ANSI/AWWA C110/A21.10 having a minimum pressure rating of 250 psi.

C. Pipe Joints - Pipe joints shall be either push-on or mechanical joint as shown on the Drawings, manufactured in accordance with the following standards:

Push-on Joints	ANSI/AWWA C110/A21.10 and ANSI/AWWA C111/A21.11
Mechanical Joints	ANSI/AWWA C110/A21.10 and ANSI/AWWA C111/A21.11
Bolts and Nuts	ANSI/AWWA C111/A21.11; tee-head bolts and hexagonal nuts.
Gaskets	ANSI/AWWA C111/A21.11

D. Encasement - All ductile iron pipe and fittings shall be polyethylene encased in accordance with ANSI/AWWA C105/A21.5

PART 3 - EXECUTION

3.01 HANDLING:

A. Pipe and accessories shall be handled with care to avoid damage. Material shall not be dropped or bumped against pipe or accessories already on the ground or against any other object. Damaged pipe which cannot be repaired to the City's satisfaction shall be replaced at the Contractor's expense.

B. The interior of all pipe and accessories shall be kept free from dirt and other foreign matter.

3.02 DIMENSIONS:

The pipe shall be furnished in the longest manufactured lengths unless otherwise shown or specified. Shorter or cut lengths shall be used only where necessary to make closure. Branches, bends or other specials, where so shown or required, shall be made to standard dimensions unless otherwise shown. All pipes shall be straight, true in form, or full diameter throughout, and shall have deep and wide socket joints.

3.03 PIPE LAYING:

A. Deflection from a straight line or grade, as required by horizontal or vertical alignments or offsets shall be in accordance with the manufacturer's specifications.

B. If the alignment requires deflections in excess of the allowable deflection per joint, special bends or a sufficient number of shorter lengths of pipe shall be furnished to provide angular deflections within the limit set forth.

C. All pipe shall be laid and maintained to the required lines and grades as indicated on the plans. Fittings shall be installed at the locations shown on the plans.

D. At times when work is not in progress, open ends of pipe and fittings shall be securely closed so that no trench water, earth, or other substance will enter the pipe or fittings.

E. No pipe shall be laid in water or when the trench or weather conditions are unsuitable for proper installation.

F. When the proposed elevation of the force main conflicts with the elevation of an existing gravity sewer, water main, gas main, or other structure, the force main shall be deepened as directed by the City to avoid said conflict. This shall be done at no additional expense to the City or the utility owner.

G. Pipe shall be laid with bell ends facing in the direction of laying. Pipe ends shall be clear of dirt and debris before the connection is made.

H. The cutting of pipe for installing valves or fittings shall be done in a neat, workmanlike manner without damage to the pipe or lining. Flame cutting of pipe shall not be allowed.

3.04 THRUST RESTRAINT:

A. Thrust blocking or restraints shall be provided at all line deflection greater than 22° and as otherwise required to protect the pipe joints from separation.

B. Thrust blocks shall be sized and dimensioned as shown in these standards.

3.05 HYDROSTATIC TESTING:

The testing method described in this paragraph is for water pressure testing. The test, which must be successfully performed on all new force mains, shall be performed in accordance with the following provisions:

A. Said test shall include all force main from the point of beginning or the wastewater lift station to the point of termination. The Contractor shall make arrangements with the City for scheduling the test after the piping has been accepted as being ready for testing. Any concrete thrust blocks shall have been in place for a period of at least ten (10) days prior to test. The test shall be performed on a day mutually agreed upon and in the presence of the City.

B. Water for testing must be furnished by the Contractor. The Contractor shall furnish all necessary equipment, piping, pumps, fittings, gauges, and operating personnel to properly conduct the test.

C. The system shall be subjected to a hydrostatic test pressure at 100 psi.

D. The test procedure shall be as follows:

1. The system shall be slowly filled with water. Air shall be expelled from the pipe through air relief valves. If additional air vents are needed to assure that all air is expelled, the Contractor shall temporarily install corporation cocks at the appropriate points. All air shall be expelled from the force main prior to applying the test pressure.

2. After the test pressure is first applied, a visual inspection of the force main shall be made for leaks. All visible leaks shall be stopped by repairing or replacing defective or damaged pipe, fittings, or valves prior to starting the official pressure test.

3. After all visible leaks are stopped, the official test shall be conducted for a period of at least two hours. During the test, the specified test pressure shall not vary more than 5 psi.

4. Pumps shall be equipped with a receiving water receptacle, and the water entering the pipeline to make up leakage shall be carefully measured and recorded. Pumping equipment shall include suitably calibrated pressure gauges. Leakage is defined as the volume of water which must be added to the pipeline to maintain a pressure within 5 psi of the specified test pressure.

If the amount of makeup water entering the pipeline (during the 2 hour test while the pressure is maintained within 5 psi of the specified test pressure) is less than or equal to the allowable leakage as calculated by the following formula*, the pipeline shall be accepted as having passed the leakage test satisfactorily:

$$\frac{L = SD\ (P)^{1/2}}{133{,}200}$$

* Formula from AWWA Standard C600

where

L = allowable leakage, gallons per hour

S = length of pipeline tested, feet

D = nominal diameter of pipe, inches

P = average test pressure during test, pounds per square inch gauge

All visible leaks, however, shall be stopped by appropriate repairs or replacement of defective or damaged materials regardless of the outcome of the test.

E. Should the line fail this official test, the pressure shall be maintained while a thorough search is made of all possible locations of leakage or other cause of pressure drop. When all such conditions are corrected, the pipe line shall be given another official test and this procedure repeated until satisfactory results are obtained.

F. All leaks developing after the line has been tested and made evident by a showing of water on the ground surface shall be repaired to the satisfaction of the Engineer regardless of the results of the official test.

3.06 IDENTIFICATION/LOCATION TAPE:

A. Furnish and install identification/location tape over the centerline of buried force mains.

B. Identification Tape for Ductile Iron Pipe

Identification tape shall be manufactured of inert polyethylene so as to be highly resistant to alkalis, acids and other destructive agents found in soil, and shall have a minimum thickness of 4-mils. Tape width shall be a minimum of 3" and a maximum of 6" and shall have background color specified below, imprinted with black letters. Imprint shall be as specified below and shall repeat itself a minimum of once every 2' for entire length of tape.

C. Identification Tape for Polyvinyl Chloride Pipe

Identification tape shall be manufactured of polyethylene with a minimum thickness of 4-mils and shall have a 1-mil thick metallic foil core. The tape shall be highly resistant to alkalis, acid and other destructive agents found in soil. Tape width shall be a minimum of 3" and a maximum of 6" and shall have background color specified below, imprinted with black letters. Imprints shall be as specified below and shall repeat itself a minimum of once every 2' for entire length of tape.

D. Tape background colors and imprints shall be as follows:

Imprint	Background Color
"Caution - Force Main Buried Below"	Green

E. Identification tape shall be "Terra Tape" as manufactured by Reef Industries, Inc., Houston, TX, or approved equal.

1. Identification tape shall be installed over all buried force mains in accordance with the manufacturer's installation instructions and as specified herein.

2. Identification tape shall be installed 2' below final grade over centerline of pipe.

3. In all PVC pipe installation, the identification/location tape shall be looped into the manholes for connection to a locating device. The tape shall be one continuous piece from manhole to manhole.

SECTION C - PRECAST CONCRETE STRUCTURES

PART 1 - GENERAL

1.01 DESCRIPTION: The work of this section includes the manufacturing and installation of precast concrete structures including manholes, lift station structures, valve vaults, utility vaults and other miscellaneous structures as detailed and specified herein.

1.02 DELIVERY, STORAGE AND HANDLING: Precast concrete structures shall be delivered to the site complete and in structurally sound condition. The Contractor shall take roper care in moving the structures to prevent cracking, breaking, or otherwise damaging the structures.

PART 2 - PRODUCTS

2.01 GENERAL: All precast structures to be used in the project shall be structurally sound and free of defects. Any spalled concrete or voids shall be properly patched or repaired using equivalent strength grout and properly cured before placement. Structures showing excessive cracking or damage should be rejected and replaced at the discretion of the City.

2.02 CONCRETE STRENGTH: All concrete used in the manufacturing of precast structures shall have a minimum compressive strength of 4,000 psi at 28 days.

2.03 SEWER MANHOLES:

A. All manholes for sanitary or storm sewers, shall be made watertight of size and dimensions as shown on the plans.

B. The base, riser sections, eccentric cone, and adjustment rings shall conform to ASTM C478. The joints between the base, riser sections and the bottom joint of the eccentric cone shall be tongue and groove type with a continuous rubber ring gasket conforming to ASTM C443 or a preformed flexible plastic gasket type joint sealant such as RUB'R-NEK as manufactured by K. T. Synder Company or equal. In addition to the gasket, the joint shall be sealed with an approved mastic.

C. The top of the eccentric cone shall be joined to the adjustment rings (if necessary) using a preformed flexible plastic gasket type joint sealant to obtain a watertight fit.

D. The manhole frame and cover shall be sealed to the adjustment rings or cone section using a preformed flexible plastic gasket type joint sealant.

E. A watertight, flexible connection shall be made between the manhole and the sewer pipes using elastomeric gaskets conforming to ASTM C923. Gaskets shall be Kor-N-Seal as manufactured by National Pollution Control Systems, Inc. of Miford, New Hampshire, or equal and be installed in strict conformance with the manufacturers instructions.

2.04 LIFT STATION STRUCTURES AND VALVE VAULTS:

A. Lift station structures and valve vaults shall be made watertight of size and dimensions shown on the plans.

B. Precast structures shall meet all requirements of paragraph 2.03 above except that flat top slabs shall be used in place of eccentric cones.

C. Where required by the plans, access hatch frames as specified herein shall be integrally cast into the top slab.

D. All concrete surfaces subject to sewer gases shall be protected by application of coal tar epoxy suitable for the intended use. These surfaces include all areas in lift station wet wells above the specified low water level. Epoxy shall be 46H-413 Tneme-Tar as manufactured by Tnemec, or equal. Apply one coat at dry mil thickness of 16-20 mils unless otherwise recommended by the manufacturer.

2.05 UTILITY VAULTS:

A. Utility vaults for underground electrical conduit runs shall consist of two piece square or rectangular precast sections meeting the requirements of ASTM C857.

B. The vaults shall be made watertight by including a continuous rubber gasket conforming to ASTM C443 along the section joint.

C. Conduit knockouts shall be located as required for the actual installation. Only those knockouts specifically used shall be removed.

2.06 FRAMES AND COVERS:

A. Frames and covers shall be included for all manholes, utility vaults and where otherwise shown on the plans.

B. Ferrous castings shall be as manufactured by Neenah Foundry Company, East Jordan Foundry, or equal, and shall conform to ASTM A48 Class 30. The covers and frames shall be of a design, type, and weight specified on the Plans.

C. Castings shall be of uniform quality, free from blowholes, porosity, hard spots, shrinkage defects, cracks or other injurious defects. They shall be smooth and well cleaned by shot blasting or other approved methods. Unless otherwise specified, they shall be coated with high grade bituminous asphalt paint conforming to Federal Specifications MIL-C-450B.

2.07 MANHOLE STEPS:

A. Steps shall be supplied for all manholes, valve vaults and utility vaults and where specifically detailed on the plans. Steps shall be cast in the precast sections.

B. Steps shall be made of copolymer polypropylene plastic and reinforced with 1/2" Grade 60 steel. Steps shall be able to resist a 1500 pound pullout force.

C. Steps must comply with all applicable provisions of OSHA regulations.

D. Manhole steps shall be Model PSI-PF as manufactured by M.A. Industries, Inc. of Peachtree, Georgia or equal.

2.08 ACCESS HATCH:

A. Where shown and required by the plans, access hatches shall be provided for precast structures. Hatches shall be either single or double door with a frame assembly fabricated of aluminum and capable of withstanding a live load of 300 lbs/sq. ft. The doors shall be equipped with heavy forged brass hinges, stainless steel pins, spring operators and an automatic hold open bar with release handle which holds the door open at 90 degrees. Each door shall be provided with a lifting handle.

B. The access frames shall be sized as shown on the drawings. Where noted, sizing may be contingent upon recommendations by equipment suppliers as required to provide equipment removal.

C. Access frames shall be accurately placed as an integral part of the precast top slab section.

D. Access frames shall be protected from direct contact with the concrete by means of a protective coating.

E. Access frames shall be type "J" or "JD" as manufactured by the Bilco Company, New Haven Connecticut, or equal.

PART 3 - EXECUTION

3.01 INSTALLATION:

A. Precast concrete structures shall be located as shown on the drawings.

B. Excavation and backfill for precast structures shall be in accordance with Article I - Section B of these standards.

C. Unless otherwise shown, the top of manholes and other structures shall be set at ground level or top of pavement.

SECTION C - LIFT STATION EQUIPMENT

PART 1 - GENERAL

1.01 DESCRIPTION:

A. Furnish and install all equipment for the lift station(s) including all structures, pumps, piping and controls as shown on the drawings and as described herein.

B. The contractor shall be required to supply the pumps and control panel from a single manufacturer.

1.02 PERFORMANCE REQUIREMENTS:

A. Lift station pumps shall be capable of passing a 3-inch solid sphere.

B. Pumps shall meet the design conditions and motor conditions specified on the plans.

1.03 SUBMITTALS:

A. The Contractor shall be required to submit two (2) copies each of the manufacturer's operation and maintenance manuals and dimensional and technical shop drawing data to the City for all equipment supplied under this section.

PART 2 - PRODUCTS

2.01 ACCEPTABLE MANUFACTURERS: Pumps shall be as manufactured by Flygt Corporation of Norwalk, Connecticut; Hydromatic Pumps, Inc. of Ashland, Ohio; Barnes Pumps, Inc of Piqua, Ohio, or Equal.

2.02 MATERIALS:

A. Submersible Non Clog Pumps

1. Each pump shall be of the sealed submersible non clog type capable of handling raw sanitary sewage. Pump casings, volute discharge pipe and flange, and sliding bracket shall be of gray iron. The impeller shall be gray iron of the non clog design.

2. Shaft seals shall be of suitable material capable of operating to a submerged pressure of 20 psi. The seal system shall not rely upon the pumped media for lubrication but shall instead have its own lubrication liquid chamber. No seal damage shall result from operating the pump out of its liquid environment. The seal system shall include a seal probe to detect the presence of water leakage. The probe signal shall be transmitted via the control cable to the alarm circuitry in the control panel.

3. The motor casing shall be watertight, filled with air or dielectric oil. All motors shall be supplied with heat sensing elements attached to the windings. The element shall trip the motor starter upon overheating. The element temperature setting shall be low enough to prevent damage to the pump but high enough to prevent unnecessary tripping. The sensor shall automatically reset when motor cools to a safe temperature. The pump power cable shall enter the motor through a cord cap assembly, double sealed to protect the motor from moisture.

4. A pump mounting base shall be provided and installed for each unit. The base shall include guiderails with supports as required, a base elbow and quick disconnect flanges for easy removal and proper pump alignment. Guiderails shall be made of stainless steel, sized to meet the pump loads. Each pump unit shall be supplied with a stainless steel lifting chain with hook which shall be fastened to the access hatch assembly.

B. Lift Station Control Panel

1. General

a. The pump manufacturer shall furnish an automatic pump station controller for operation on either a 120/240 volt single phase or a 460 volt, 3 phase-3 wire, 60 hertz power source.

b. The pump station controller shall be suitable for operation and automatic alternation of a duplex pump system and shall be complete with motor control, solid state alternator, convenience power supply, miscellaneous controls, etc. All components shall be UL listed.

c. Controls for each of the two (2) pumps shall be rated for the actual horsepower from the manufacturer's information.

d. The control and power wiring for the pumps and level sensors shall be arranged to extend through two separate conduits to the wetwell. Conduits shall be properly sealed to protect the panel against explosive type gases which may exist in the wetwell.

2. Panel Enclosure

a. The enclosure shall be NEMA 4X with drip shield, 14 gauge stainless steel (minimum), welded construction. The enclosure shall have an outer weather door, a hinged inner "operator's door" and mounting hardware.

b. All equipment, controls, etc., shall be located inside the enclosure. Selector switches, pilot lights, etc., shall be located on a deadfront swingout panel (operator's door) located behind an outside weather door. All other equipment, exposed wiring, etc., shall be located behind the swingout panel.

3. Controller Features

a. Operating Sequence:

1. When a pump is called for by the water level in the wet well, the control unit shall send a start signal to the appropriate pump and verify operation with the starter auxiliary contact. Appropriate verification time delays shall be included.

2. When the wet well level continues to rise the second pump shall start.

3. When the wet well level reaches low level, the pump(s) shall stop and pump alternation shall occur.

4. When the pump run verification signal is not received with the appropriate time period, the alternator shall deselect the failed pump, select the next pump, remove the failed pump from the sequence, illuminate a pump fail light. The failed pump shall remain out of service and the pump fail light shall remain illuminated until manually reset.

b. Terminal blocks for incoming power, pump power conductors, level sensors, leak detectors, motor thermal sensors, and control wiring.

c. Circuit breakers with over-current protection for each of two pumps and the convenience power transformer. Circuit breakers shall be magnetic-hydraulic or thermal magnetic, ambient temperature compensated type, calibrated and factory sealed with the proper trip setting. The devices shall have a minimum interrupting rating of 10,000 RMS symmetrical.

d. Magnetic full voltage starters for each of two pumps. The starter overload relays (one per phase) shall be ambient compensated, quick-trip type. Overload elements shall be matched to the pump motor characteristics.

e. Convenience and control power transformer with 460 volt primary and 120/240 volt secondary rated at 2KW (where required due to three phase service).

f. Convenience power distribution panel (30A, 120/240V, 1PH-3W) with main breaker and 20A, 1P branches. Circuit breaker operators shall be accessible without opening the deadfront "Operator's door". Branch breakers shall be supplied as follows: One for control, one for GFI receptacle, and one for condensate heater.

g. GFI type duplex convenience receptacle (120V, 20A) mounted on the dead front operators door.

h. A low volt power supply and interface system suitable for operation of the float switches in an intrinsically (explosion proof) safe mode.

i. An adjustable thermostatically controlled heater to provide condensate protection inside the enclosure.

j. Two pump automatic electronic alternator which will alternate the pumps with each pump down cycle.

k. The pump controller shall provide relay outputs to interface with the motor control devices as required.

l. Running time meters for each pump. The meter shall indicate the number of hours of pump operation. The meter shall be enclosed in a dust and moistureproof molded plastic case. The flush mounted dial shall register in hours and tenths of hours up to 999.9 hours before repeating.

m. The control panel shall provide the following status/alarm indications for each pump:

1. Pump running light (green)
2. Pump failed light (red)
3. Seal failure
4. High wet well level

In addition, the panel shall have a Hand-Off-Auto selector switch for each pump to control mode of pump operation and timing modules as required for the pump failed feature.

n. The local alarm system shall consist of an alarm light and shall signal any of the above alarm conditions.

o. The alarm light shall be a weatherproof high intensity strobe fixture with a red lexan globe and a metal globe guard mounted on top of the enclosure.

D. Level Sensors

1. The level sensors shall consist of weighted floats with mercury contacts rated for low volt operation at milliwatt levels. Each level sensor shall be furnished complete with sufficient cable length to run to the terminal box below the pump station controller and leave slack for future level adjustment.

2. Floats shall meet the requirements for Class 1, Division 1, Group C & D and be intrinsically safe for installation in an explosion hazard environment.

3. Floats shall operate at a maximum of 24 volts.

4. Furnish a stainless steel bracket mounted in the hatch opening for hanging the sensor cables.

2.03 LIFT STATION PIPING:

A. Interior lift station and valve pit piping shall be flanged ductile iron, centrifugally cast conforming to the latest revisions of ANSI/AWWA C150/A21.50 and ANSI/AWWA C151/A21.51. The interior surface of the pipe shall be cement lined and seal coated in accordance with ANSI/AWWA C104/A21.4. Pipe shall be Pressure Class 250 minimum.

B. Flanges shall be of 250 psi working pressured, drilled to ASA 125 pounds standards and meeting the requirements of ANSI/AWWA C111/21.10.

2.04 VALVES:

A. General:

1. All valves shall be furnished with an exterior finish coating the same as the adjacent piping system to which they are connected or as approved by the Engineer.

2. All valves of the same type shall be by the same manufacturer.

3. Where required for satisfactory operation of valves, provide extension stems, stem guides, cast iron valve and curb boxes, floor boxes and other valve appurtenances. Extension stems shall be complete with guide bearings, wrench nut, and tee handle wrench. All valve stems and machinery stuffing boxes shall be packed with material as selected for the intended service. All valves shall be designed for repacking.

4. Tee wrench operators shall be provided as required for proper operation.

B. Plug Valves:

1. Plug valves shall be of the non-lubricated, resilient seated, eccentric type.

2. All plug valves shall be of the size indicated on the Drawings. All plug valves shall be of the drip-tight-closing, resilient-faced plug type, and shall be of the eccentric seating construction such that the opening movement of the closing member (plug) results in the closing member rising off the body seat contact. Port areas shall be equal to at least 80 percent of the nominal size pipe area.

3. Valve bodies, bonnets and plugs shall be constructed of cast iron meeting the requirements of ASTM A126 Class B.

4. Valves shall be rated for 175 psi up to 12" and 150 psi for valves 14" and larger. An adjustable close position stop shall be provided for field adjustment. The seat end and standard flow direction shall be cast on the valve body.

5. All shaft seals shall be replaceable without disassembling the valve and while the valve is under system operating pressure.

6. The plug shall be of a one piece design with a precision molded resilient facing. The resilient seating surface shall not be in the flow way pattern when the valve is in the open position. The body seating surface shall be welded nickel overlay containing a minimum of 90% nickel.

7. Radial journal bearings shall be stainless steel, of the permanently lubricated type. Two thrust bearings shall be provided in the upper journal area, one of stainless steel and one of teflon. The lower journal shall have one stainless steel thrust bearing of the non-adjustable type. Grit seals shall be furnished in the upper and lower journals to prevent abrasive media from entering the bearing and seal areas.

8. Unless otherwise noted or shown, all valve and connections shall be ANSI Class 125 flanges.

9. Valve shall be series 5000 as manufactured by Val-Matic Valve & Mfg. Corp., Series 100 as manufactured by Dezurik, or equal.

C. Rubber Flapper Swing Check Valves:

1. Swing check valves shall have a cast iron body and cover meeting the requirements of ASTM A126, Class B. The valve body shall have full flow equal to the nominal pipe diameter at any point through the valve. Valve shall be designed for a 175 psi minimum working pressure.

2. The valve seating surface shall be on a 45 degree angle to minimize disc travel. The disc shall be of one piece construction, precision molded with an integral O-ring type sealing surface. The disc shall be made of Buna-N and have a non-slam closing characteristic by means of a 35 degree disc stroke and disc return action.

3. The top access port shall be full size, allowing removal of the disc without removing the valve from the pipeline.

4. The check valve shall have backflow capabilities by means of a screw type backflow actuator.

5. The interior of the valve shall be coated with an epoxy suitable for potable water.

6. Unless otherwise shown or noted, the check valves end sections shall be ANSI Class 125 flanges.

7. Rubber flapper swing check valves shall be as manufactured by Val-Matic Valve and Manufacturing Corp. or equal.

D. Mud Valves: Valves shall be of spigot end, non-rising steam design having a cast iron body. The stem, stem nut, seat ring and disc ring shall be made of bronze. All bolts and nuts shall be of corrosion resistant steel. Valves shall be furnished complete with extension steam having a 2" square not as required for the application. Each valve to be furnished with a tee handle wrench of length as required by the drawings. Mud valves shall be Model F-3080 as manufactured by Clow, or equal.

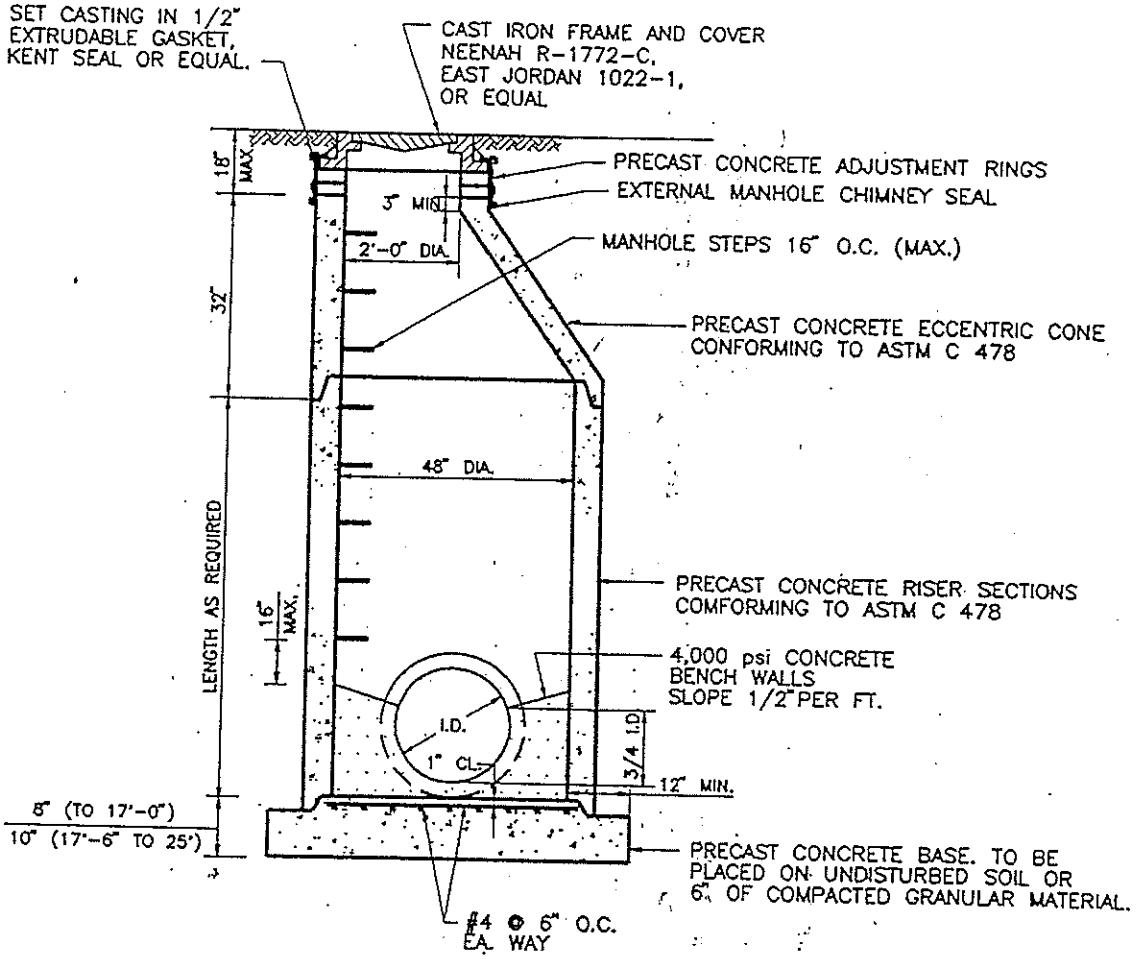

INSIDE MANHOLE DIAMETER, INCHES	SEWER PIPE DEFLECTION THROUGH MANHOLE, DEGREES	MAX. PIPE SIZE ALLOWED		
		PVC	RCP	DI
48"	0° - 45°	27"	24"	24"
48"	46° - 90°	21"	18"	18"

MANHOLE DETAIL - TYPE I

City of Madison
Figure II-1

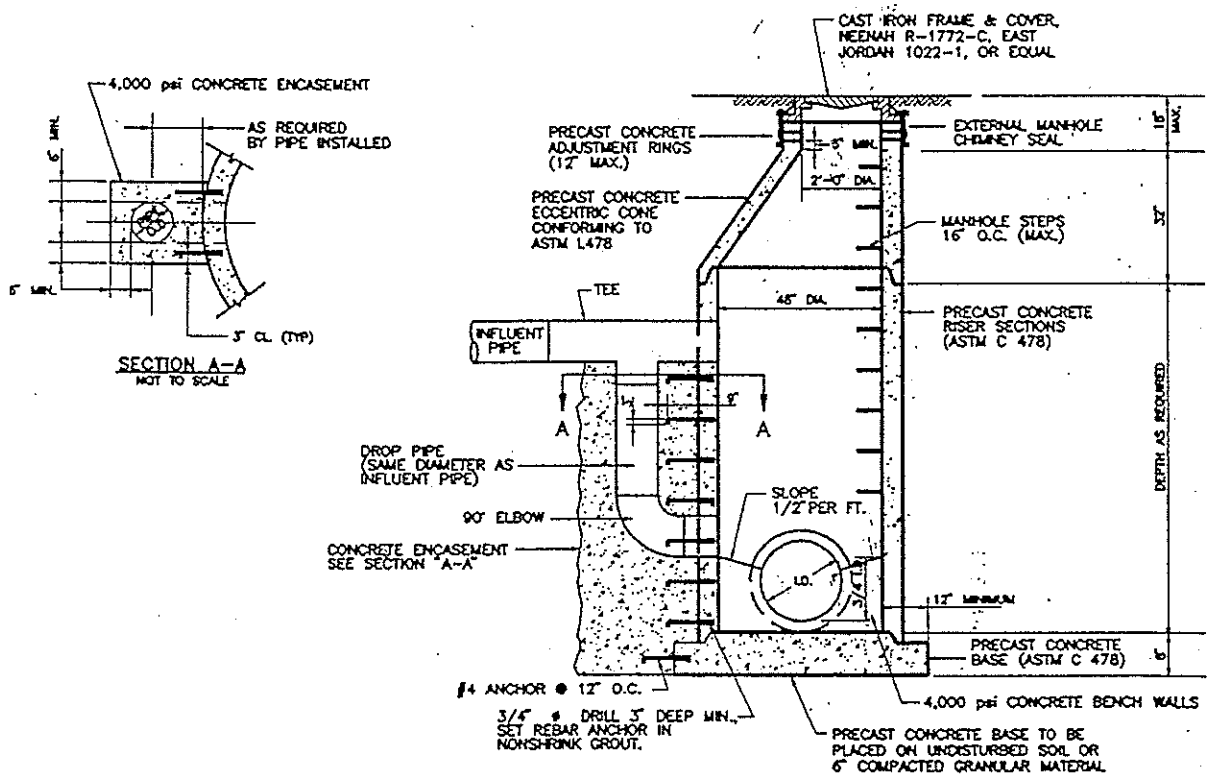

DROP MANHOLE DETAILS - TYPE I

City of Madison
Figure II-2

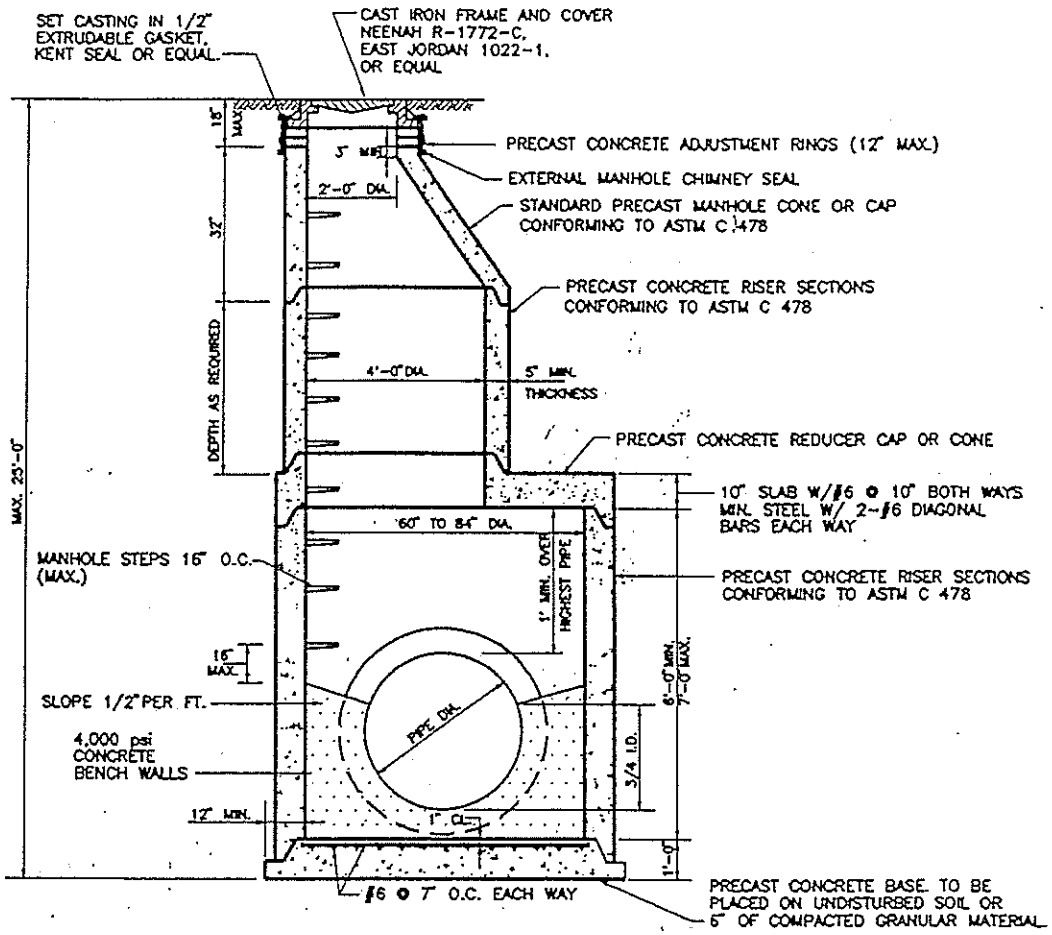

INSIDE MANHOLE DIAMETER, INCHES	SEWER PIPE DEFLECTION THROUGH MANHOLE, DEGREES	MAX. PIPE SIZE ALLOWED		
		PVC	RCP	DIP
60"	0° - 45°	36"	30"	36"
60"	46° - 90°	27"	24"	24"
72"	0° - 45°	48"	36"	48"
72"	46° - 90°	36"	30"	30"
84"	0° - 45°	48"	48"	54"
84"	46° - 90°	36"	30"	36"

MANHOLE DETAIL - TYPE II

City of Madison
Figure II-3

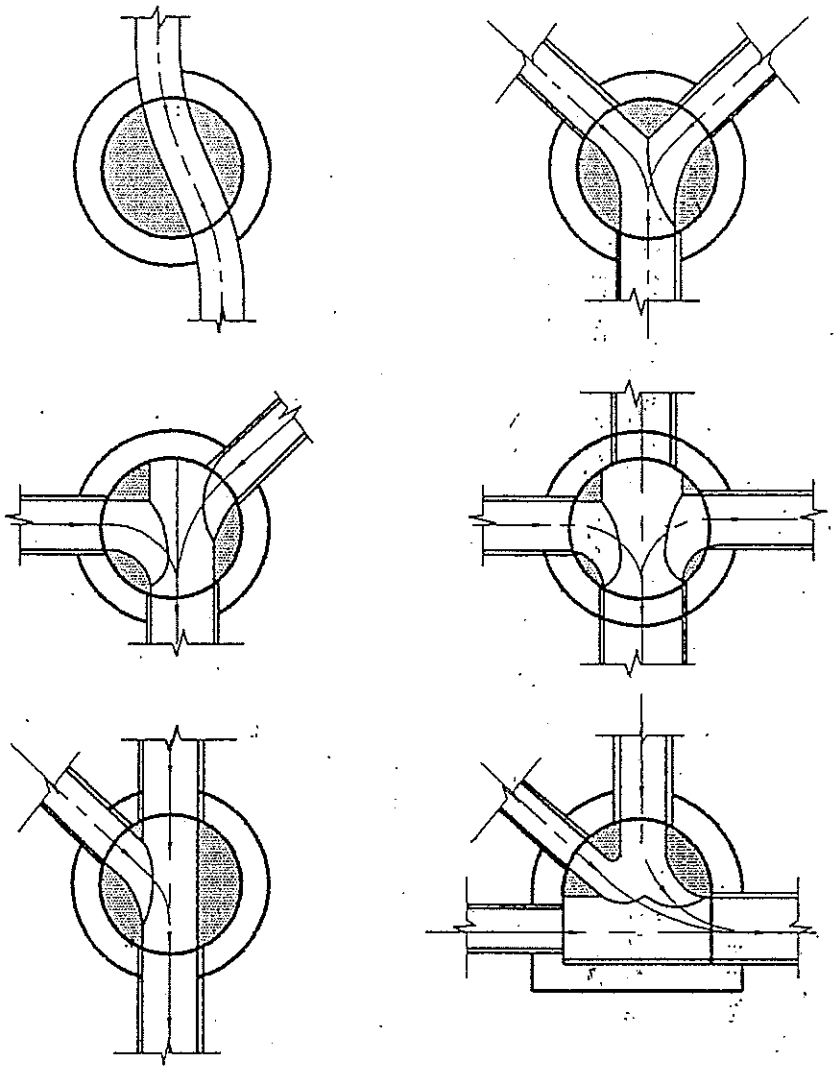

SANITARY SEWER
BENCH SLOPE = 1/2" PER FT.

MANHOLE BENCHING DETAILS

City of Madison
Figure II-4

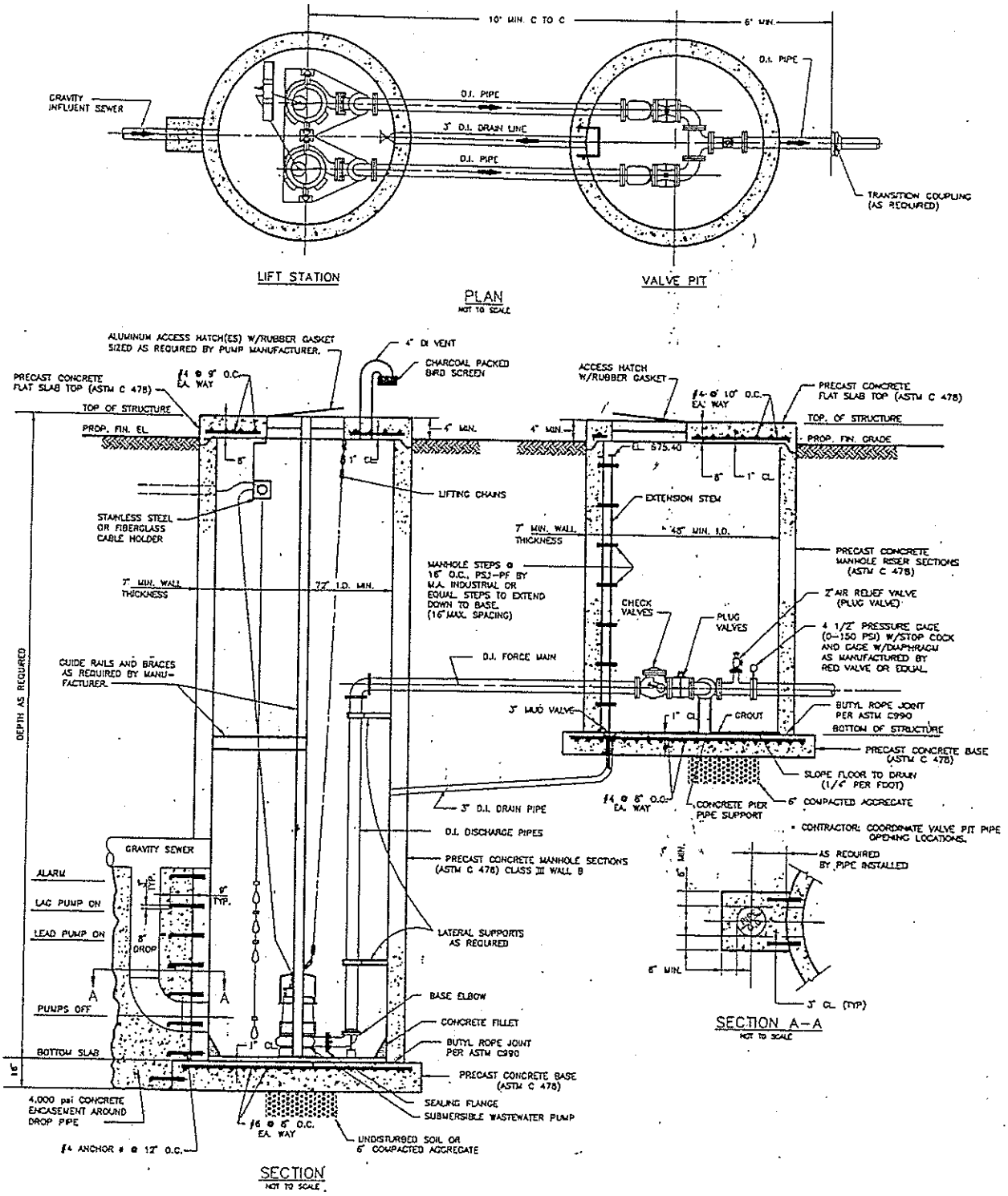

LIFT STATION W/VALVE PIT

City of Madison
Figure II-5

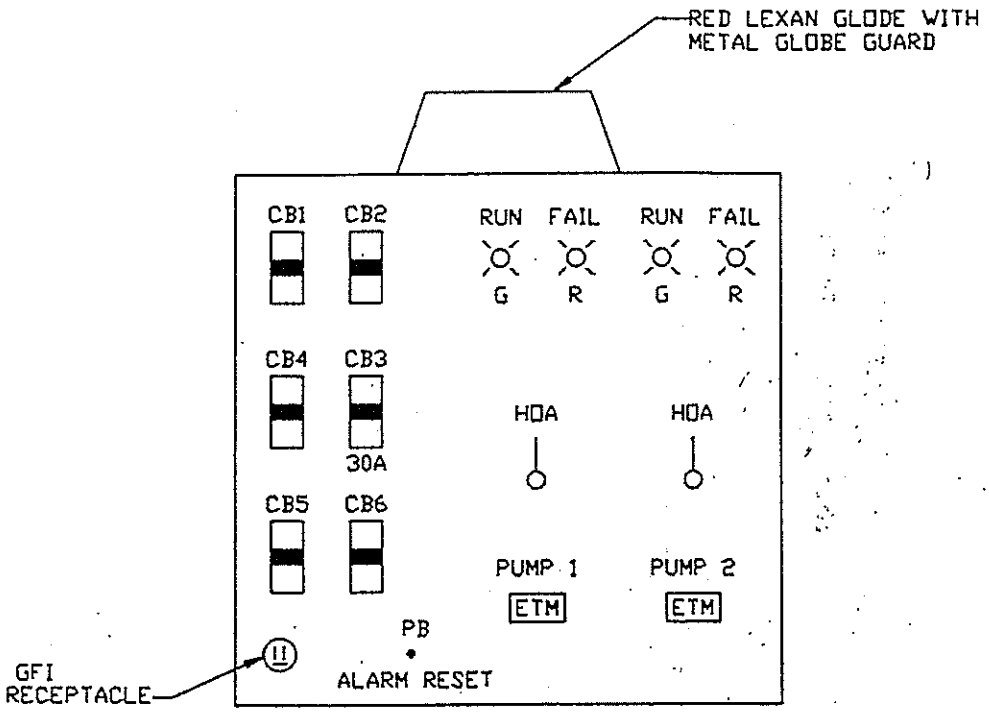

NOTES:

1. NEMA TYPE 4X ENCLOSURE
2. ELEVATION VIEW REPRESENTS THE WEATHER FRONT OPERATOR DOOR HINGED DOOR NOT SHOWN
3. PUMP CIRCUIT BREAKERS TO BE SIZED AS REQUIRED BY MOTOR SIZE
4. ALL COMPONENTS TO BE LABELED WITH ENGRAVED LAMENATED NAME PLATE
5. CIRCUIT BREAKER SCHEDULE:

   CB1 CB2 - PUMPS
   CB3 - CONTROL VOLTAGE MAIN BREAKER (30A)
   CB4 - CONDENSATE HEATER
   CB5 - GFCI RECEPTACLE
   CB6 - CONTROLS

LIFT STATION CONTROL PANEL

City of Madison
Figure II-6

DIMENSION	LINE	CORNER & GATE POST
A	3'-6"	4'-6"
B	10" Ø	12" Ø
Ø	2" O.D.	VARIES PER SPEC

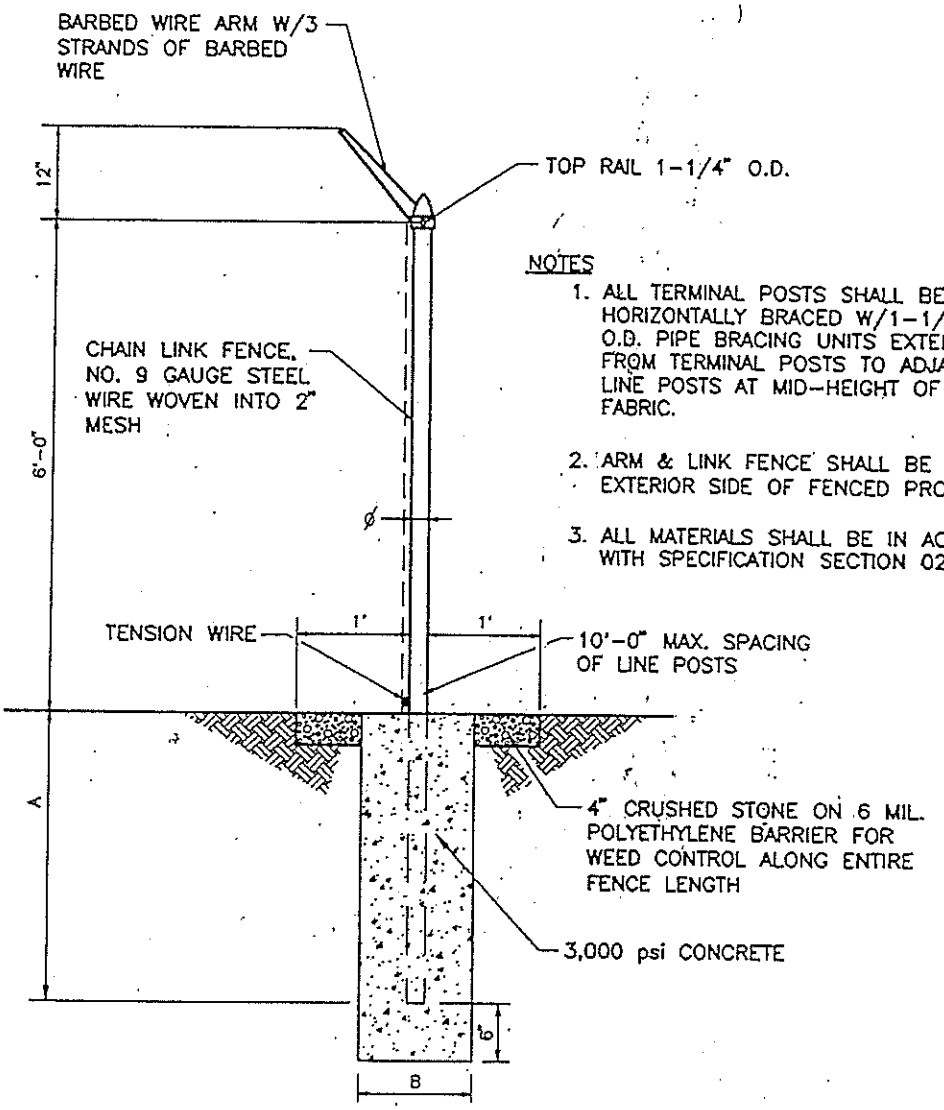

NOTES

1. ALL TERMINAL POSTS SHALL BE HORIZONTALLY BRACED W/1-1/4" O.D. PIPE BRACING UNITS EXTENDING FROM TERMINAL POSTS TO ADJACENT LINE POSTS AT MID-HEIGHT OF FENCE FABRIC.
2. ARM & LINK FENCE SHALL BE TO EXTERIOR SIDE OF FENCED PROPERTY.
3. ALL MATERIALS SHALL BE IN ACCORDANCE WITH SPECIFICATION SECTION 02830.

FENCE DETAILS

City of Madison
Figure II-7

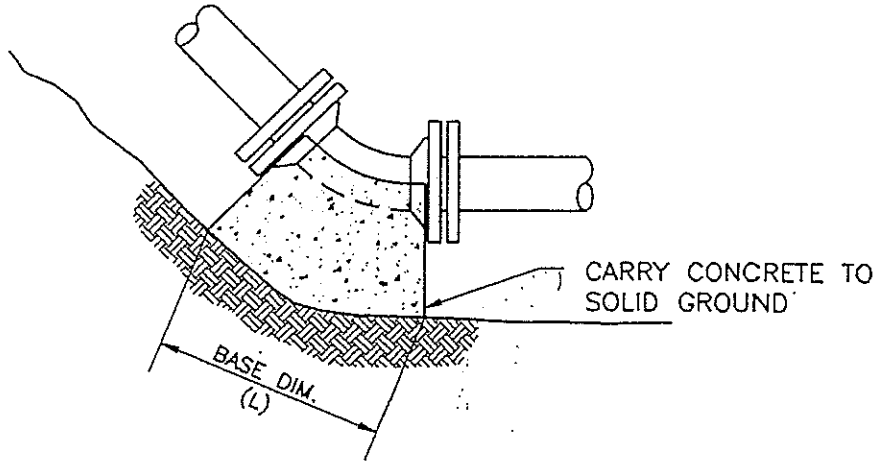

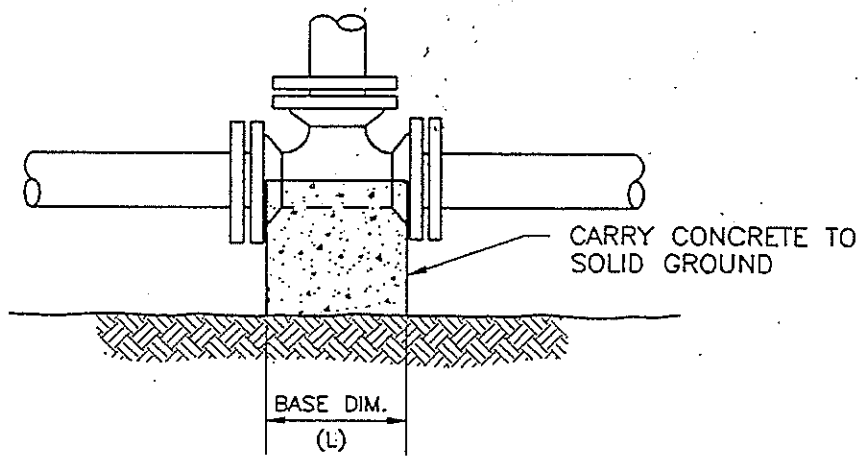

THRUST BLOCK BASE DIMENSION (L)*				
DIA	TEE	90°EL.	45°EL.	22.5°EL.
4" OR LESS	1'-4"	1'-8"	1'-3"	10"
6"	2'-0"	2'-4"	1'-9"	1'-3"
8"	2'-7"	3'-0"	2'-11"	1'-7"
10"	3'-4"	3'-11"	2'-11"	2'-1"
12"	4'-0"	4'-8"	3'-6"	2'-6"

NOTE: THRUST BLOCK BASE AREA SIZE DETERMINED USING 200 PSI. PRESSURE RATING ON PIPE AND 2000 PSI. BEARING STRENGTH OF THE SOIL.

* "L" DIMENSION IS BOTH LENGTH AND WIDTH.

FORCE MAIN THRUST BLOCKING DETAILS

City of Madison
Figure II-8

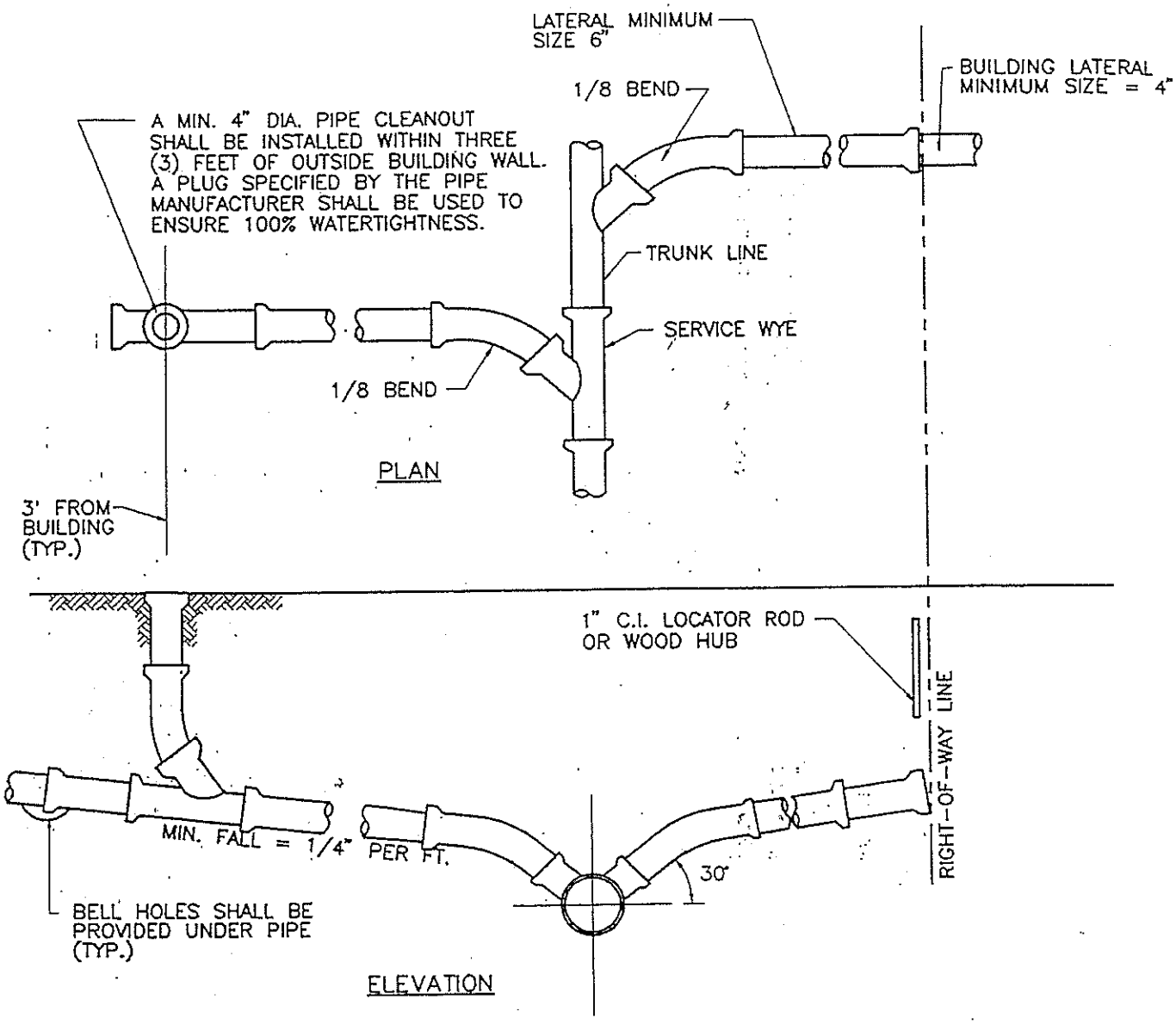

HOUSE SERVICE CONNECTION

City of Madison
Figure II-9

ARTICLE III - WATER DISTRIBUTION SYSTEMS

SECTION A - DOMESTIC WATER SYSTEMS

PART 1 - GENERAL

1.01 DESCRIPTION: This section describes the installation and testing requirements for domestic water systems including water mains, hydrants, service meters and connections and other appurtenances associated with the distribution of potable water.

1.02 QUALITY ASSURANCE:

A. All similar components shall be manufactured and supplied by one manufacturer unless specifically approved otherwise by the City.

B. All material shall be new and unused of the minimum standards specified herein.

1.03 CODES AND STANDARDS: The following codes and standards are referenced in this section.

A. American Waterworks Association (AWWA)
B. American National Standards Institute (ANSI)
C. American Society of Testing and Materials (ASTM)
D. National Sanitation Foundation (NSF)

PART 2 - PRODUCTS

2.01 WATER MAIN PIPING:

A. PolyVinyl Chloride (PVC) Pipe

1. All PVC water main piping shall conform to the requirements of AWWA C900, DR14 (Class 200) or ASTM D2241, SDR-21 (200 psi). PVC pipe shall have a cell classification of 12454B or 12454C.

2. All pipe shall be marked as to indicate appropriate ASTM or AWWA designation and pressure class.

3. Pipe Joints - All PVC pipe joints shall be bell and spigot type with elastomeric gaskets conforming to the requirements of ASTM D3139.

B. Ductile Iron Pipe:

1. All ductile iron pipe shall be manufactured in accordance with ANSI/AWWA C151/A21.51 for pipe barrel construction; ANSI/AWWA C151/A21.51 for determining pipe wall thickness; ANSI/AWWA C151/A21.51 for installing cement mortar lining; and ANSI/AWWA C151/A21.51 for construction of pipe fittings.

2. All ductile iron pipe and pipe fittings shall be mortar lined with bituminous seal coat in accordance with ANSI 21.4.

3. Unless otherwise shown on the Drawings, the thickness class for ductile iron pipe shall be Pressure Class 350 for pipes 12 inches or smaller and Pressure Class 250 for pipes 14 inches or larger.

4. Pipe Joints - Ductile iron pipe joints shall conform to the following requirements:

   a. Push-on and Mechanical - Push-on and mechanical joints including accessories shall conform to ANSI/AWWA C151/A21.51. Bolts shall be high strength cast iron with tee head with hex nuts.

   b. Flanged - Flanged joints shall not be used for underground installations except within structures. Flanged joints shall meet the requirements of ANSI/AWWA C151/A21.51 or ANSI B.16. All flanged joints shall be rated for 250 psi pressure and have ASA 125 lb. bolt patterns. All flanged joints shall be furnished with 1/8 inch thick full face red rubber gaskets.

   c. Bell and Spigot - Bell and spigot joints shall conform to ANSI/AWWA C151/A21.51.

5. Polyethylene Encasement - Ductile iron mains shall be encased with polyethylene film conforming to ANSI/AWWA C151/A21.51.

2.02 FITTINGS: Fittings for all types of pipe shall be ductile iron mechanical joint type manufactured in accordance with ANSI/AWWA C110/A21.10 and having a minimum pressure rating of 250 psi.

2.03 GATE VALVES: Gate valves shall be cast iron body, double disc, non-rising stem type manufactured in accordance with ANSI/AWWA C500. Valves shall have bronze seat and disc rings, o-ring seals and be rated for a maximum working pressure of 200 psi. for valves 12 inches and smaller and 150 psi for valves 14 inches and larger. Valves shall be as manufactured by Mueller Company, Kennedy Valve Company, or equal.

2.04 INSERTING VALVES: Where inserting valves are required on existing water mains, they shall be ductile iron double disc as specified above. Inserting valves shall be Mueller Type H-800 or equal.

2.05 TAPPING VALVES AND SLEEVES:

A. Tapping sleeves shall be iron body with mechanical joint ends and flanged valve end. Sleeves shall be rated for a working pressure of 200 psi thru 12" sizes and 150 psi when 14" and larger. Sleeves shall be suitable for the existing water main material. Tapping sleeves shall be Mueller Type H-615 or H-616, or equal.

B. Tapping valves shall be iron body, double disc, non-rising, stem gate valves as specified above. Tapping valves shall have mechanical joint by flanged ends as required to connect with the tapping sleeve. Tapping valves shall be Mueller Type 667 or equal.

2.06 VALVE BOXES:

A. Valve boxes for buried valves shall be cast iron, either two piece or three piece type. Boxes shall be extension type with slide or screw type adjustment. Each base and bottom section shall be sized for the valve served. Valve box covers shall be stamped "Water" for identification.

B. Valve boxes for curb stops shall be cast iron, extension type with foot piece, curb box and lid.

2.07 FIRE HYDRANTS:

A. Fire hydrants shall be of the post dry type barrel design conforming to ANSI/AWWA C502. Hydrants shall be rated for a 200 psi working pressure.

B. The main valve closure shall be of the compression type, opening against system pressure and closing with the pressure.

C. The main valve opening shall be 5¼" and shall be designed so as to allow removal of the seat and drain valve mechanism without disturbing the ground line. The hydrant shall have two hose nozzles and one pumper nozzle.

D. Hydrants shall be of the dry type design with o-ring sealed reservoir.

E. Fire hydrants shall be Mueller Super Centurion 200 or equal.

2.08 SERVICE METERS:

A. Water service meters shall be magnetic drive, positive displacement, nutating disc type meeting the requirements of AWWA C700.

B. Meters 5/8" through 1" shall have a cast bronze body and two-piece chamber enclosing a molded plastic disc which nutates on a wear resistant thrust roller.

C. Meters 1½" through 2" shall have a cast bronze body with bolted top and flat disc piston of molded plastic.

D. Meters shall include a plastic internal strainer and plastic lid and bonnet.

E. Meters shall be rated for a maximum working pressure of 150 psi and register in U.S. gallons. The register shall be permanently sealed.

F. Service meters shall be 400 Series or 500 Series as manufactured by Hersey Products, Rockwell type SR, or equal.

2.09 METER SETTERS:

A. Meter setters shall be prefabricated copper yoke type sized as required for the service meter.

B. Units shall include a lockwing type ball meter valve on the inlet and dual check valve on the outlet.

C. The fittings and arrangement shall be as required for the application.

D. Meter setters shall be as manufactured by Mueller, Ford Meter Box, or equal.

2.10 METER BOXES:

A. Meter boxes shall be made of rigid PVC having a metallic bottom and sized as required for the application.

B. Meter boxes shall be preassembled, ready for meter installation and shall include meter setters as specified in paragraph 2.10 above.

C. Boxes shall be installed complete with foam insulating pad for protection against freezing.

D. Meter boxes shall be EZ-Setter as manufactured by Mueller Co. or equal.

2.11 METER BOX COVERS:

A. Meter box covers shall be cast iron of standard weight construction. Covers shall be sized as required to fit the applicable meter box provided the minimum diameter is 15".

B. Covers shall be of the flat lid, no lock type having an integral reader lid. Covers shall be stamped with the words "water meter".

C. Where required for concrete or asphalt installation, the meter box covers shall include a 4" cast iron frame.

D. Meter box covers shall be as manufactured by Mueller, Ford Meter Box, or equal.

2.12 TAPPING SADDLES: Where plastic mains are tapped, furnish and install service clamp or saddle with threaded tap for 3/4" or 1" service as manufactured by Mueller, Ford Meter Box, or equal.

2.13 CURB STOP:

A. For 1-1/2" services, provide a Ford or Mueller curb stop at the main. Stops to be bronze and ball with Buna-N rubber "O" rings. Connections to be for pack joints.

B. Furnish cast iron curb stop box and one curb stop wrench.

2.14 SERVICE TUBING:

A. Customer service tubing from the main to the meter installation shall be polybutylene plastic tubing in accordance with AWWA Specification C-902. Tubing shall be for working pressure up to 250 psi and shall have an SDR of 9.

B. Tubing for 5/8" x 3/4" meters shall be 3/4" size, unless noted otherwise on the plans.

C. Tubing for 1" meters shall be 1" size unless noted otherwise.

D. 1-1/2" service shall be Class 250 PVC water main.

PART 3 - EXECUTION

3.01 INSTALLATION:

A. Pipe Depth - Water mains shall be installed to the depths shown on the Plans, except that no line shall be installed with less than 42" of cover.

B. Relation to Sanitary Sewers:

1. Unless specifically allowed otherwise by the City, water mains shall be installed a minimum of ten (10) feet horizontally from any existing or proposed sanitary sewer. Where such a requirement is not possible, the sanitary sewer shall be constructed of cast iron pipe or encased in concrete for a distance of ten (10) feet in each direction from the crossing, measured perpendicular to the water line. This will not be required when the water line is at least two (2) feet above the sewer line.

2. Where water mains cross sanitary sewer lines, a minimum vertical clearance of 18" shall be provided, whether the main is above or below the sewer. Conformance with this requirement shall not waive the minimum cover requirements.

C. Plastic Pipe Locating Tape:

1. Locating tape shall be installed over all PVC water lines. This tape shall be of a type which can be used with electronic pipe locating devices.

2. Locating tape shall be continuous and in a 3" width. Tape shall be a sandwich type of a metallic strip between polyethylene film. Tape shall be printed "Caution, Water Line Buried Below".

3. Tape shall be spliced together for continuity.

4. Tape shall be laid in the trench along the pipe centerline 2' below finish grade.

D. Valves:

1. Butterfly and gate valves shall be set vertically and bedded solidly on trench bottom. Flanged valves shall be securely bolted utilizing red rubber or asbestos gaskets and high strength cast iron bolts and nuts.

2. Valve boxes shall be set squarely over tee wrench nut and vertical. Leave valve box flush with finish grade and readjust as necessary to reconform with surface until final settlement or paving is complete.

3. All valves shall be buried and have road boxes unless otherwise specified.

E. Fire Hydrants:

1. Fire hydrants shall be rigidly blocked and braced against thrust. Contractor shall back up hydrant base with concrete and support base all as detailed on the plans.

2. An envelope of washed, coarse gravel shall be provided around the drain ports of the hydrants to assure barrel drainage of the hydrants. Gravel shall be a minimum 2 feet diameter and to 6 inches above ports.

3. Ground line marks on hydrants shall be set 2 inches above finish grade. All hydrants shall have one prime coat and two field coats of a suitable exterior machinery enamel or color used in this system. Prime coat shall be touched-up prior to application of finish coat.

F. Tapping Valves: Tapping valves shall be installed and the tap made in accordance with the manufacturer's recommended procedures and good practice. Valves shall be securely supported in vertical position during tapping operations. Tamp fill thoroughly around and under valve after installation. Installation shall be checked for leaks before backfilling.

G. Service Connections: At locations shown on the plans or where designated by the City, the Contractor shall furnish all materials and labor to connect water services to mains. Any piping or fittings required to make the connection and provide service shall be furnished by the Contractor. Meter pits and settings shall be installed plumb and true according to good construction practices.

3.02 HYDROSTATIC TESTING:

A. The Contractor shall perform a combination pressure and leakage test on the new mains after they have been filled with water as previously specified. This work shall be done after all of the main is backfilled.

B. The test procedure shall be as herein specified and in accordance with applicable provisions of AWWA Standard C-600.

C. The mains shall be subjected to a minimum test pressure of 150% of the maximum system operating pressure of the main being tested provided that the maximum pressure does not exceed the ratings of the valves, restraints and other materials. The duration of each test shall be at least two hours. Each valved section of pipe shall be so tested.

D. The test pressure shall be accomplished by means of a pump connected to the pipe. Such pump, including all meters, connections, fittings, gauges, etc. shall be supplied by the Contractor.

E. Leakage shall be defined as the quantity of water required to refill the main in order to maintain pressure within 5 psi of the specified test pressure after the pipe has been filled with water and expelled of air. Leakage shall not be measured by a drop in pressure over a period of time.

F. No pipe installation shall be accepted if the leakage is greater than that determined by the following formula:

$$L = \frac{SD\,(P)^{1/2}}{133{,}200}$$

where:
- L = allowable leakage, in gallons per hour
- S = length of pipe tested, in feet
- D = nominal pipe diameter, in inches
- P = average test pressure, in pounds per square inch (gauge)

3.03 DISINFECTION OF MAINS

A. General: The Contractor shall be required to disinfect all new water mains, services, leads and appurtenances in accordance with AWWA C-651 "Standards for Disinfecting Water Mains". The work shall consist of filling the mains, disinfection, testing, and flashing as specified herein.

B. Filling the Mains:

1. The new piping system shall be slowly filled with water from the utility distribution system. Where pressure is insufficient to raise water into mains at higher elevations, Contractor shall furnish booster pumping equipment to complete the filling and flushing.

2. All air shall be expelled from the mains as they are filled. Air valves and hydrants at high points in the main shall be utilized for this purpose. Where permanent vents are not provided, Contractor shall install corporation cocks at high points to assure removal of air. Such cocks shall be left in place and location noted by dimension ties on the field record set of drawings.

C. Disinfection:

1. Before being placed in service, all new mains and repaired portions of, or extensions to, existing mains shall be chlorinated with a chlorine solution so that a chlorine residual of not less than 25 PPM remains in the water after 24 hours standing in the pipe.

2. A chlorine gas-water or hypochlorite mixture shall be applied by means of a solution-feed chlorinating device. Chlorinating devices for feeding solutions of chlorine gas must provide means for preventing the backflow of water into the chlorine cylinder.

3. The preferred point of application of chlorinating agent is ahead of the beginning of the pipeline extension or any valve section of it and through a corporation stop inserted by the Contractor, in the top of the pipe. The water injector for delivering the chlorine-bearing water into the pipe should be supplied from a tap on the pressure side of the gate valve

controlling the flow into the pipeline extension.

4. Water from the existing distribution system or other source of supply shall be controlled so as to flow slowly into the newly laid pipeline during the application of chlorine. The rate of chlorine mixture flow shall be in such proportion to the rate of water entering the pipe that the chlorine dose applied to the water entering the newly laid pipe shall produce at least a 25 PPM residual after 24 hours.

5. If the circumstances are such that a shorter retention period must be used, the chlorine concentration shall be increased accordingly.

6. In the process of chlorinating newly laid pipe, all valves or other appurtenances shall be operated while the pipeline is filled with the chlorinating agent.

D. Testing and Flushing:

1. Following chlorination, all treated water shall be thoroughly flushed from the newly laid pipeline at its extremities until the replacement water throughout its length shall, upon testing, be proven comparable in quality to the water served the public from the existing water supply system and approved by the Indiana State Board of Health. This satisfactory quality of water delivered by the new main should continue for a period of at least two full days as demonstrated by laboratory examination of samples taken from a tap located and installed in such a way as to prevent outside contamination.

2. Before the system is placed into use, the Contractor shall obtain from the new mains two successive water samples 48 hours apart, and have them tested for bacteria content by the State Board of Health. Samples shall be drawn in accordance with the Board's procedure.

3. If samples do not prove satisfactory, the system shall be rechlorinated and resampled until safe water is approved.

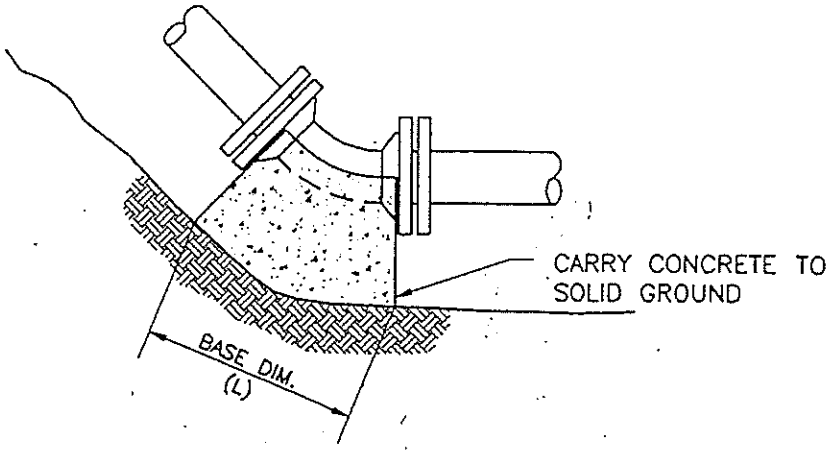

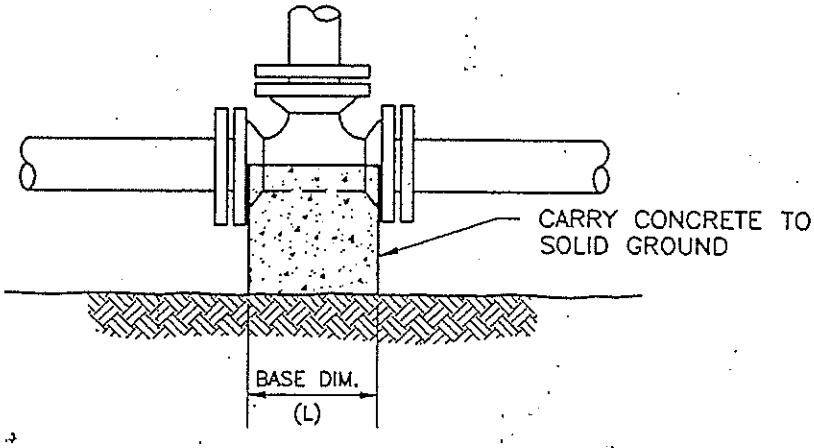

THRUST BLOCK BASE DIMENSION (L)*				
DIA	TEE	90°EL.	45°EL.	22.5°EL
4" OR LESS	1'-4"	1'-8"	1'-3"	10"
6"	2'-0"	2'-4"	1'-9"	1'-3"
8"	2'-7"	3'-0"	2'-11"	1'-7"
10"	3'-4"	3'-11"	2'-11"	2'-1"
12"	4'-0"	4'-8"	3'-6"	2'-6"

NOTE: THRUST BLOCK BASE AREA SIZE DETERMINED USING 200 PSI. PRESSURE RATING ON PIPE AND 2000 PSI. BEARING STRENGTH OF THE SOIL.

* NOTE: DIMENSION "L" IS BOTH DIRECTIONS

WATER MAIN THRUST BLOCKING DETAILS

City of Madison
Figure III-1

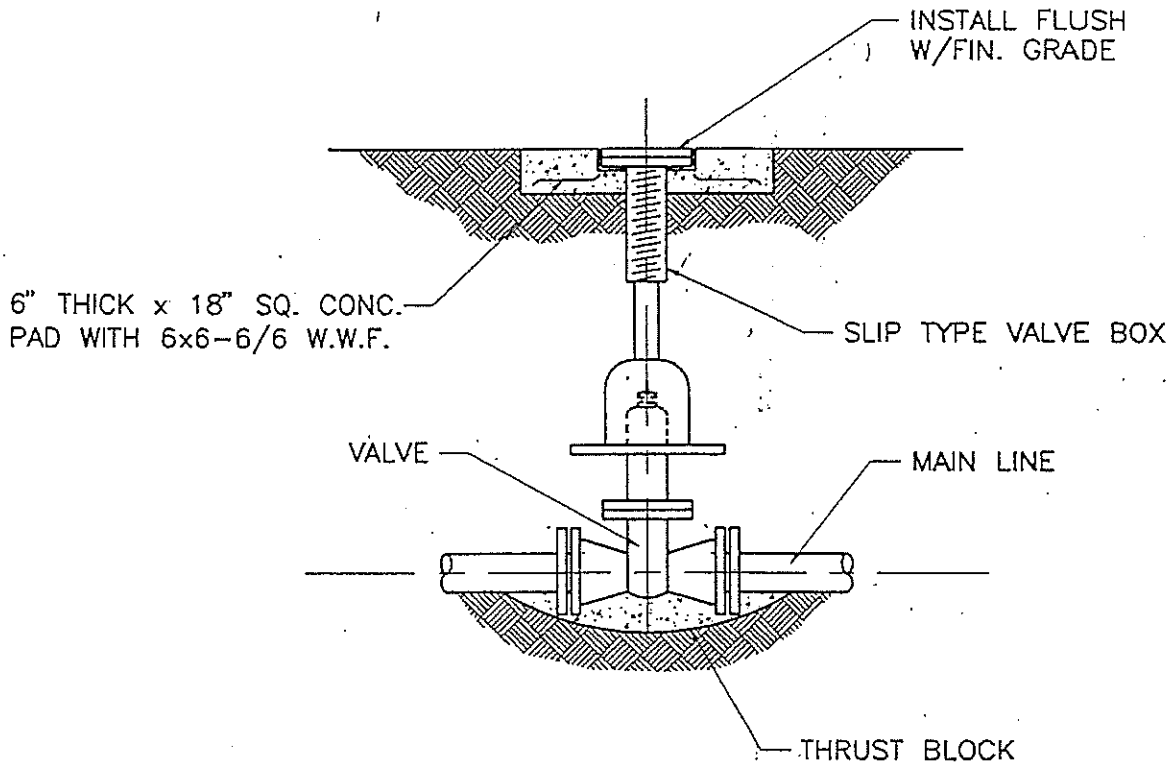

VALVE BOX DETAIL

City of Madison
Figure III-2

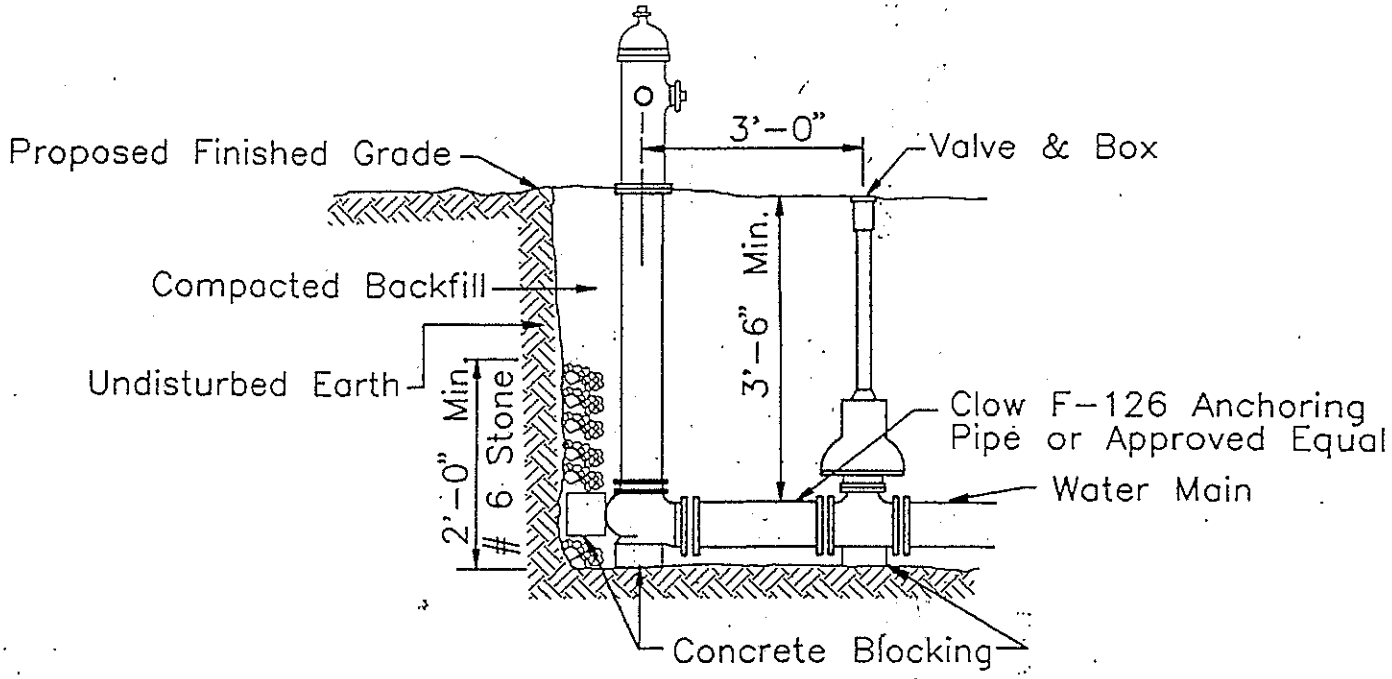

FIRE HYDRANT DETAIL

City of Madison
Figure III-3

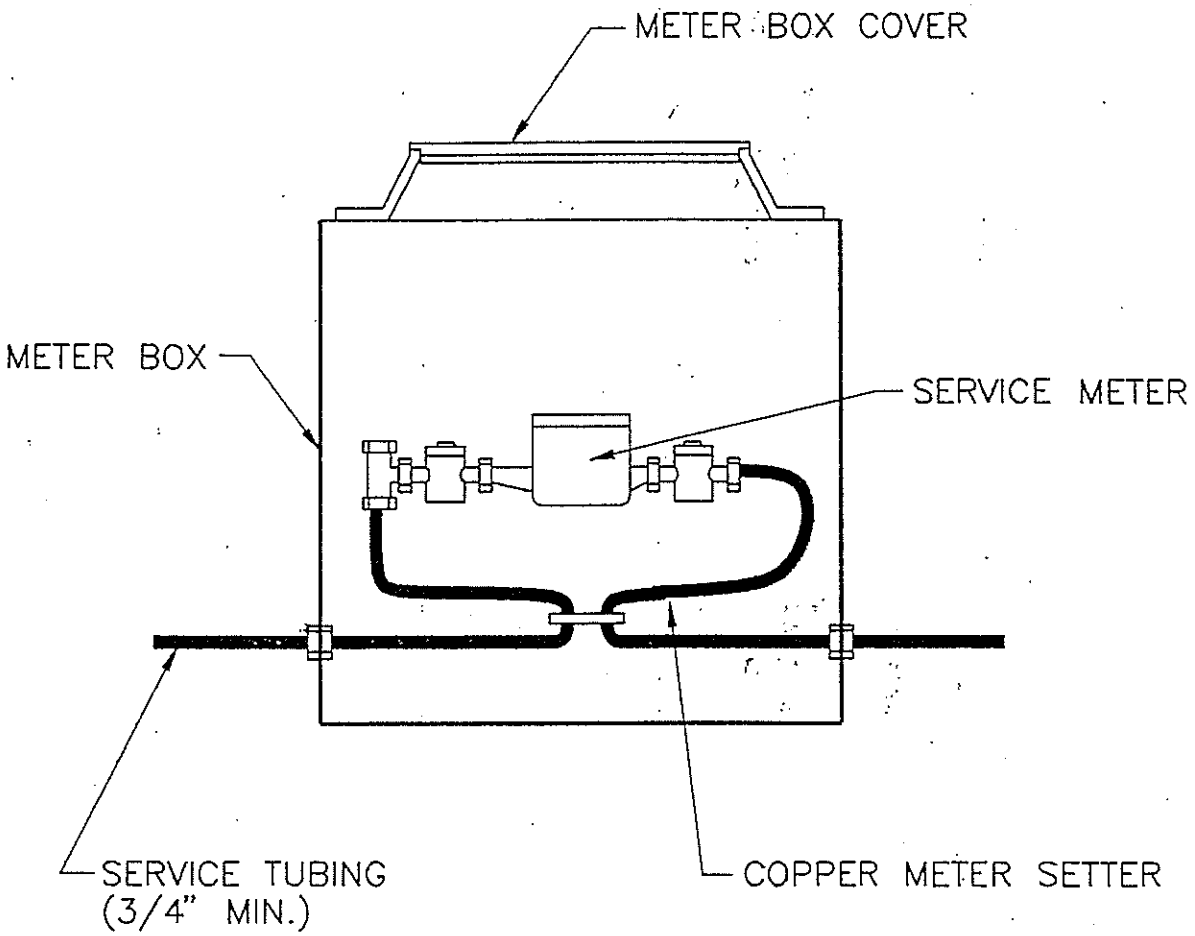

WATER METER DETAIL

City of Madison
Figure III-4

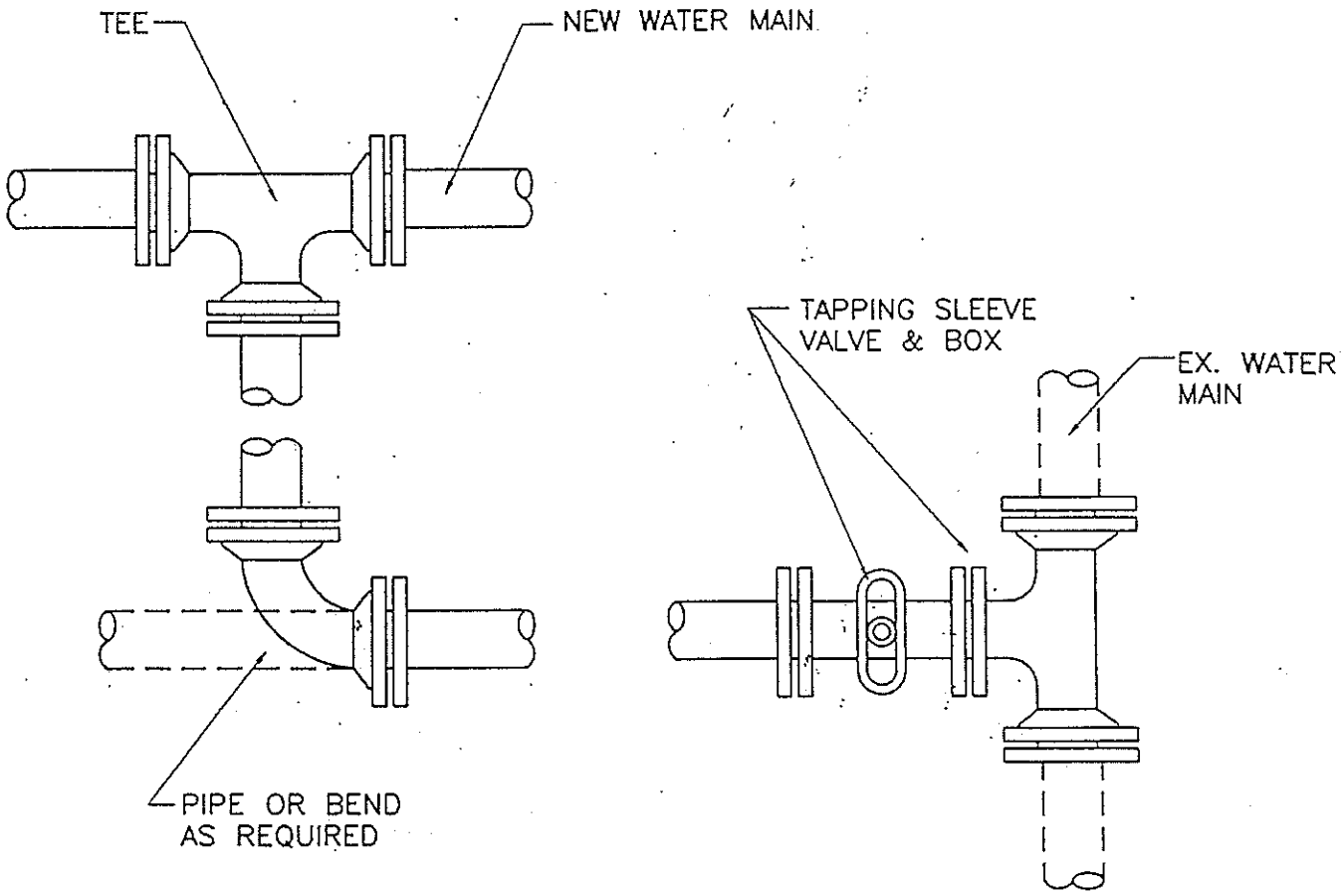

CONNECTION TO EXISTING WATER MAIN

City of Madison
Figure III-5

ARTICLE IV - STORM SEWER SYSTEMS

SECTION A - STORM SEWERS

PART 1 - GENERAL

1.01 DESCRIPTION

A. This section describes the materials and installation required for storm sewer piping systems.

B. This section is to be used only when non-watertight joints will be allowed. Hydrostatic or air testing will not be required for storm sewers unless excessive leakage is suspected.

C. This specification covers the following types of materials for storm sewers:

1. Reinforced Concrete Pipe and Fittings
2. Polyvinyl Chloride Pipe (PVC)
3. Corrugated Metal Pipe
4. Perforated Underdrain Pipe

1.02 PIPE IDENTIFICATION

A. Each length of pipe shall bear the name of the manufacturer, location of the plant, and the date of manufacture. Each length shall likewise be marked to designate the class or strength of the pipe. The marking shall be made on the exterior or interior of the pipe barrel near the end and shall be plainly visible.

PART 2 - PRODUCTS

2.01 REINFORCED CONCRETE PIPE AND FITTINGS

A. All concrete pipe shall conform to ASTM C76, "Reinforced Concrete Culvert Storm Drain and Sewer Pipe".

B. All concrete pipe shall be Class III, wall B unless otherwise approved by the City.

C. All reinforced concrete pipe joints shall be spigot groove type joint with O-ring gasket conforming the ASTM C443 "Joints for Circular Concrete Sewer and Culvert Pipe, Using Rubber Gaskets".

D. Precast reinforced concrete end sections shall be in accordance with the cited specifications to the extent which they comply. End sections shall be sized to match the pipe.

2.02 POLYVINYL CHLORIDE PIPE (PVC)

A. PVC Pipe 4" through 15" in diameter.

1. All PVC Pipe 4" through 15" in diameter shall conform to ASTM D1784, "Rigid Poly (Vinyl Chloride) and Chlorinated Poly (Vinyl Chloride) Compounds" and either:

a. ASTM F794, "Poly (Vinyl Chloride) (PVC) Ribbed Gravity Sewer Pipe and Fittings Based on Controlled Inside Diameter",

b. ASTM F949, "Poly (Vinyl Chloride) (PVC) Corrugated Sewer Pipe with a Smooth Interior and Fittings", or

c. ASTM D3034, "Type PSM Poly (Vinyl Chloride) (PVC) Sewer Pipe and Fittings".

2. PVC sewer pipe shall be SDR 35 with cell classification of 12454-B or 12354-C.

3. Pipe joints shall be push-on type conforming with ASTM D3212 "Joints for Drain and Sewer Plastic Pipes using Flexible Elastomeric Seals".

B. PVC pipe 18" through 48" in diameter.

1. All PVC pipe 18" through 48" in diameter shall conform to ASTM D1784, "Rigid Poly (Vinyl Chloride) and Chlorinated Poly (Vinyl Chloride) Compounds and either:

a. ASTM F794, "Poly (Vinyl Chloride) (PVC) Ribbed Gravity Sewer Pipe and Fittings based on Controlled inside Diameter",

b. ASTM F949, "Poly (Vinyl Chloride) (PVC) Corrugated Sewer Pipe with a Smooth Interior and Fittings", or

c. ASTM F679, "Poly Vinyl Chloride) (PVC) Large-Diameter Plastic Gravity Sewer Pipe and Fittings", for sizes 18" to 27" only.

2. Pipe shall be made from PVC compounds with a minimum cell classification of 12364A.

3. Pipe joints shall be push-on type conforming with ASTM D-3212.

C. Gaskets shall be factory installed and chemically bonded to the bell end of the pipe.

2.03 CORRUGATED METAL PIPE (CMP)

A. Corrugated Metal Pipe shall be aluminum-zinc-coated steel manufactured in accordance with ASTM A806 "Aluminum-Zinc-Coated Steel Sheet (by Hot-Dip Process) for Storm Sewer/Drainage Pipe".

B. When required by the Drawings, bituminous coating for corrugated steel pipe shall meet the requirements of ASTM A849 "Post-Coated (Bituminous) Corrugated Steel Sewer and Drainage Pipe".

C. End sections for CMP sewers or culverts shall be of the same material as the pipe. End sections and coupling bands shall be suitable for the pipe size specified. Band couplers shall have corrugations that mesh with the corrugations of the pipe.

D. Fittings such as stub-tee connections or saddles shall be shop fabricated.

2.04 PERFORATED UNDERDRAIN PIPE:

A. Perforated underdrain pipe shall corrugated polyethylene tubing manufactured in accordance with ASTM F405 or ASTM F667 (10" to 15" only).

B. Underdrain piping shall be bedded with gravel or selected bedding material as shown and required by the details included herein.

PART 3 - EXECUTION

3.01 GENERAL CONSTRUCTION REQUIREMENTS:

A. Before installing piping, the Contractor shall carefully verify location depth type of joint needed and size of pipe to which connection is proposed. Contractor shall assure that the lines can be run as contemplated without interfering with footings, walls, other piping, fixtures, etc.

B. All lengths of pipe shall be dimensioned accurately to measurements established at the site and shall be worked into place without springing or forcing. Cut sections of pipe shall be reamed to remove all burrs.

C. Utmost care shall be exercised in transporting and handling all pipe, fittings, valves, etc., in order to avoid shock and damage to pipe and coatings. Lifting shall be by joist or skids when hand lifting is not feasible. Dropping of the pipe will not be permitted. Pipe handled on skidways must not be skidded or rolled against pipe already on the ground. Damaged or defective pipe and appurtenances shall be replaced.

D. The pipe shall be thoroughly cleaned before being laid and kept clean during construction.

E. The Contractor shall cut all pipe and drill all holes that may be necessary.

F. Pipe trenching and backfill shall be performed in accordance with Article I - Section C.

SECTION B - INLETS AND CATCH BASINS

PART 1 - GENERAL

1.01 DESCRIPTION: The work of this section shall include the manufacturing and installation of precast concrete storm sewer inlets and catch basins as detailed and specified herein.

1.02 DELIVERY, STORAGE AND HANDLING: Precast concrete structures shall be delivered to the site complete and in structurally sound condition. The Contractor shall take proper care in moving the structures to prevent cracking, breaking or otherwise damaging the structure.

PART 2 - PRODUCTS

2.01 GENERAL: All precast concrete structures to be used on the project shall be structurally sound and free of defects. Any spalled concrete or voids shall be properly repaired using equivalent strength grout and properly cured before placement. Structures showing excessive cracking of damage should be rejected and shall be replaced at the discretion of the City.

2.02 CONCRETE STRENGTH: All concrete used in the production of precast inlets and catch basins shall have a minimum compressive strength of 4,000 psi at 28 days.

2.03 INLETS AND CATCH BASINS:

A. All precast inlets and catch basins shall be manufactured in accordance with ASTM C478 and the Indiana Department of Transportation (IDOT) "Standard Specifications".

B. Reinforced concrete pipe used as inlets or catch basins shall meet the requirements for concrete storm sewer pipe specified in Section A, paragraph 2.01 above.

C. Where practical, inlets and catch basins shall be of standard size and dimensions as identified by the IDOT standards.

2.04 CASTINGS:

A. Castings for inlets and catch basin shall be made of either gray or ductile iron. Metal used in the manufacture of castings shall conform to ASTM A48 Class 35B for gray iron or ASTM A536 Grade 65-45-12 for ductile iron.

B. Castings shall be of uniform quality, free from blowholes, shrinkage, distortion or other defects.

C. Castings placed in roadways, drives, or other locations subject to vehicular traffic shall be heavy duty type, suitable for the applicable loadings.

D. Castings shall be as manufactured by Neenah Foundry Company, East Jordan Iron Works or equal.

PART 3 - EXECUTION

3.01 INSTALLATION:

A. Storm sewer inlets and catch basins shall be of the size and type shown on the plans and as detailed herein. Structures shall be installed level and true to grade.

B. Excavation and backfill for inlets and catch basins shall be in accordance with Article I, Section B. All structures shall be placed on a leveling surface consisting of a minimum of 4" of stone or "B" borrow.

C. Where structures are placed in pavement areas or areas which may be paved in the future, the height of the casting shall be determined by the depth of pavement.

D. Inlet and outlet pipes shall extend through the structure walls a sufficient distance to allow for connections to the storm sewer system. Pipes shall be flush with the interior wall face and mortared into place so as to prevent leakage around their outlet surfaces.

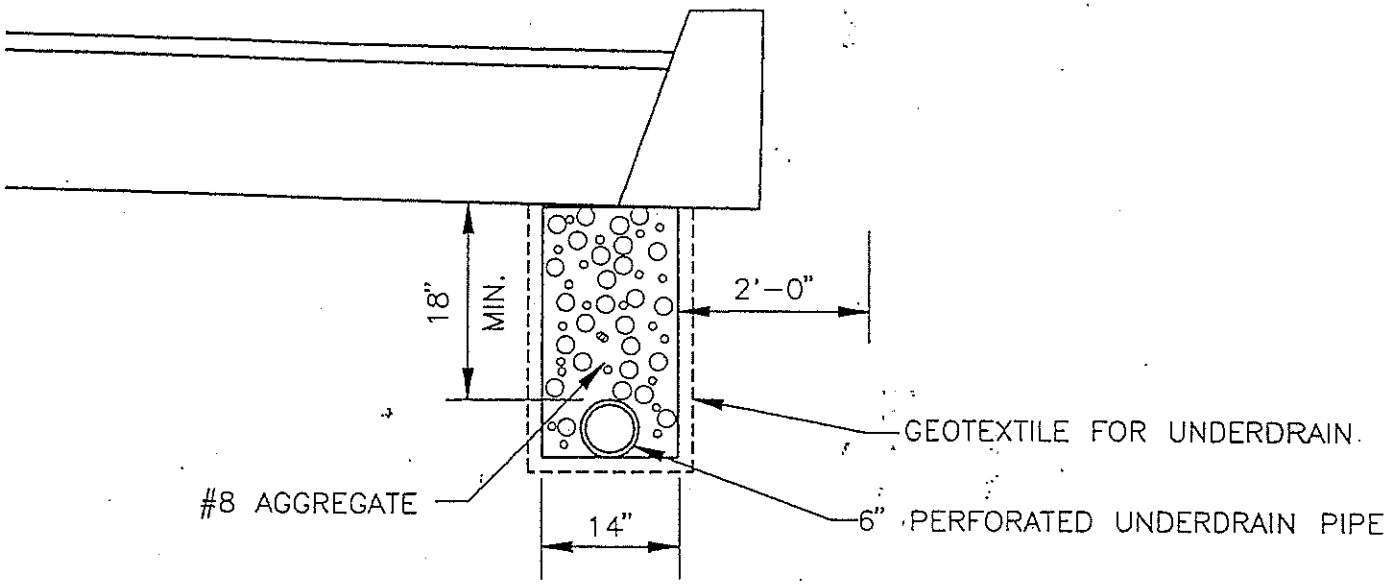

NOTE: UNDERDRAINS SHALL BE INSTALLED UNDER BOTH SIDES OF PAVEMENT.

UNDERDRAIN BEDDING DETAILS

City of Madison
Figure IV-1

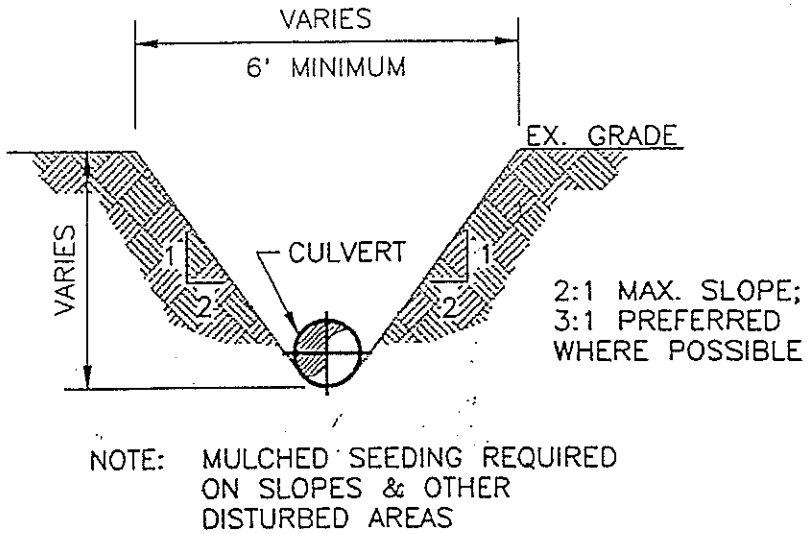

V-DITCH DETAIL

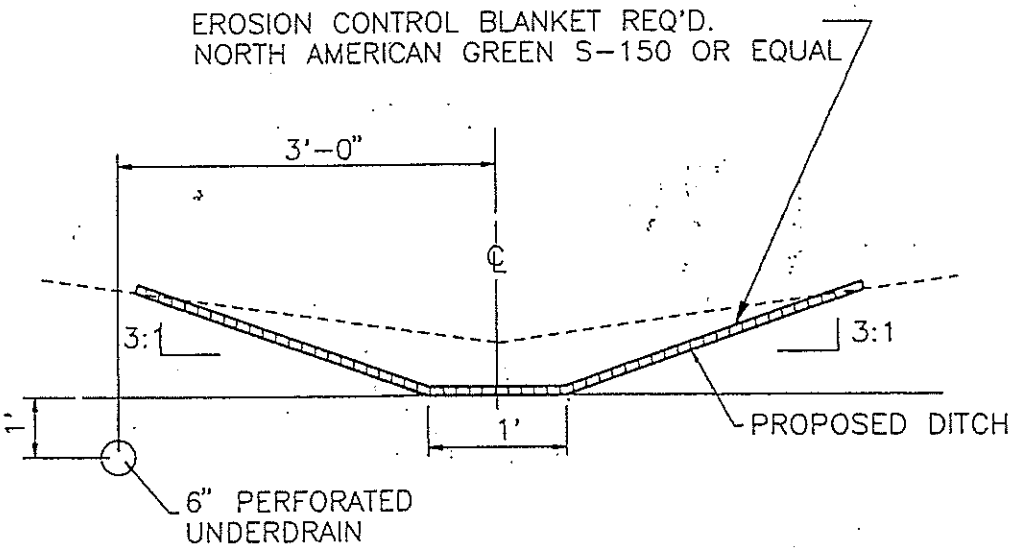

FLAT BOTTOM DITCH DETAIL

DRAINAGE DITCH DETAILS

City of Madison
Figure IV-2

ARTICLE V - CONSTRUCTION STANDARDS FOR STREETS

SECTION A - STREETS AND ROADS

PART 1 - GENERAL

1.01 DESCRIPTION: The work of this section includes the supply of all materials, labor, and equipment required to construct all streets and roads.

1.02 QUALITY ASSURANCE: All materials used shall be new, of minimum quality as specified herein. Material testing and certification documents shall be made available to the City or its agents upon request. This information shall include, but not be limited to, materials testing reports, gradation analysis, and manufacturers certifications.

PART 2 - PRODUCTS

2.01 GENERAL: All materials used in construction of streets and roads shall meet the requirements of the latest revision of the Indiana Department of Transportation (INDOT) Standard Specifications.

PART 3 - EXECUTION

3.01 GENERAL:

A. Streets and roads shall be installed in accordance with all applicable construction standards and practices of the INDOT Standard Specifications, and as detailed herein.

B. In addition to these standards, construction shall be performed as outlined in Chapter V "Local Roads and Streets" of the Association of State Highway and Transportation Officials (AASHTO) geometric design policies. Where conflict exists between these standards and AASHTO design policies, these standards shall take precedence.

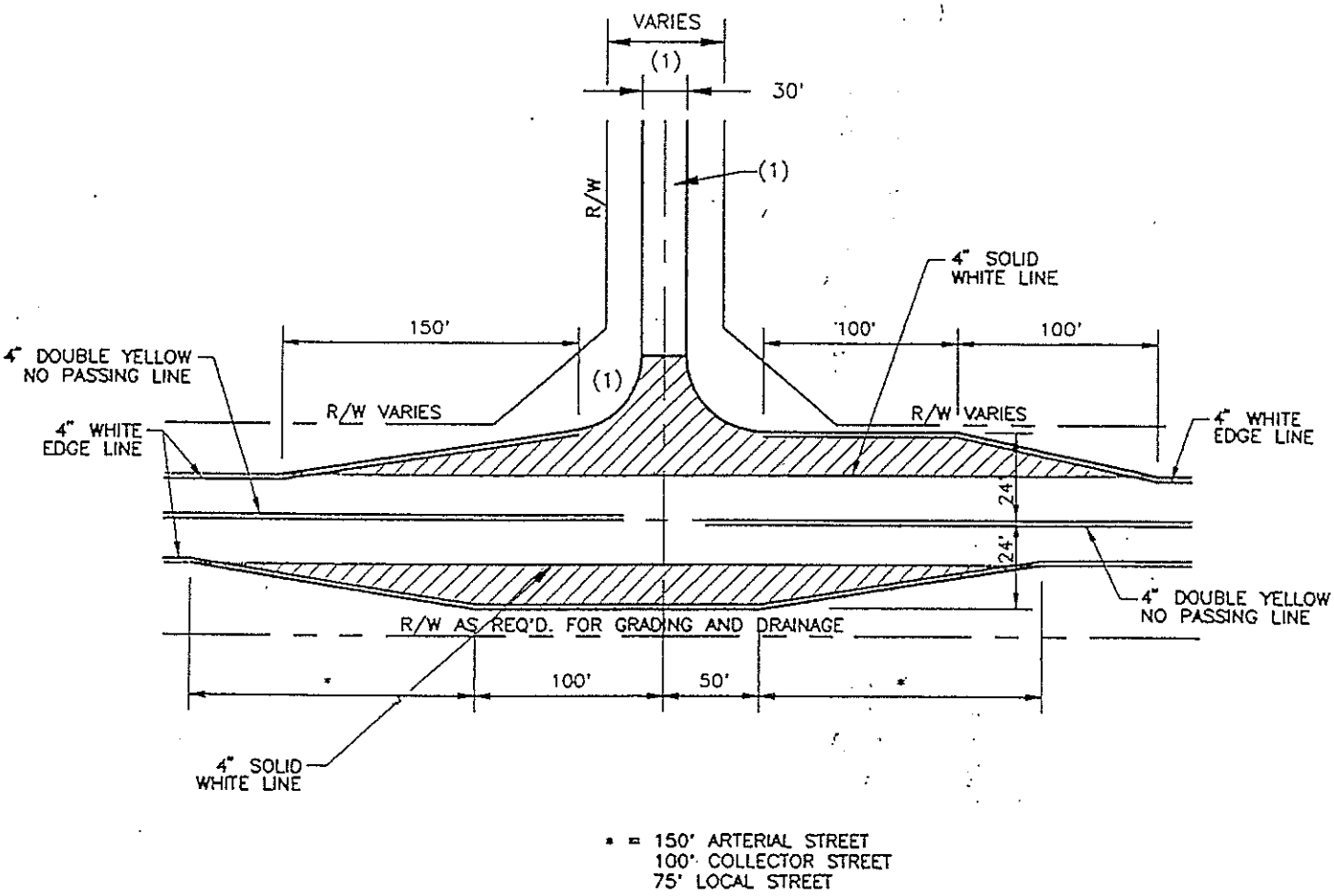

(1) NOTE: SUBDIVISION STREET WIDTH, R/W WIDTH, AND CORNER RADIUS VARY BY STREET TYPE.

SUBDIVISION ENTRANCE DETAIL

City of Madison
Figure V-1

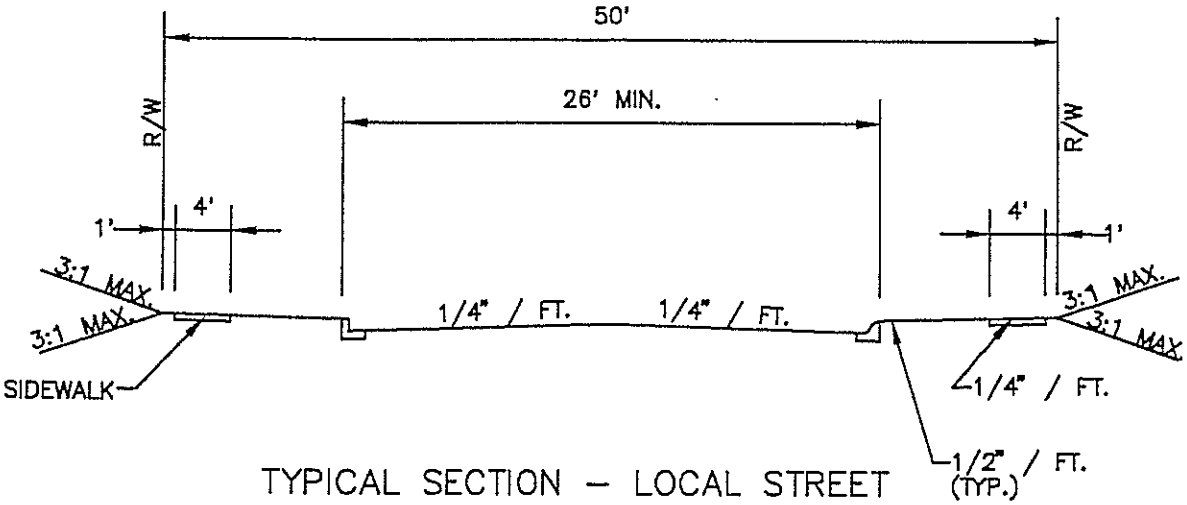

TYPICAL SECTION – LOCAL STREET

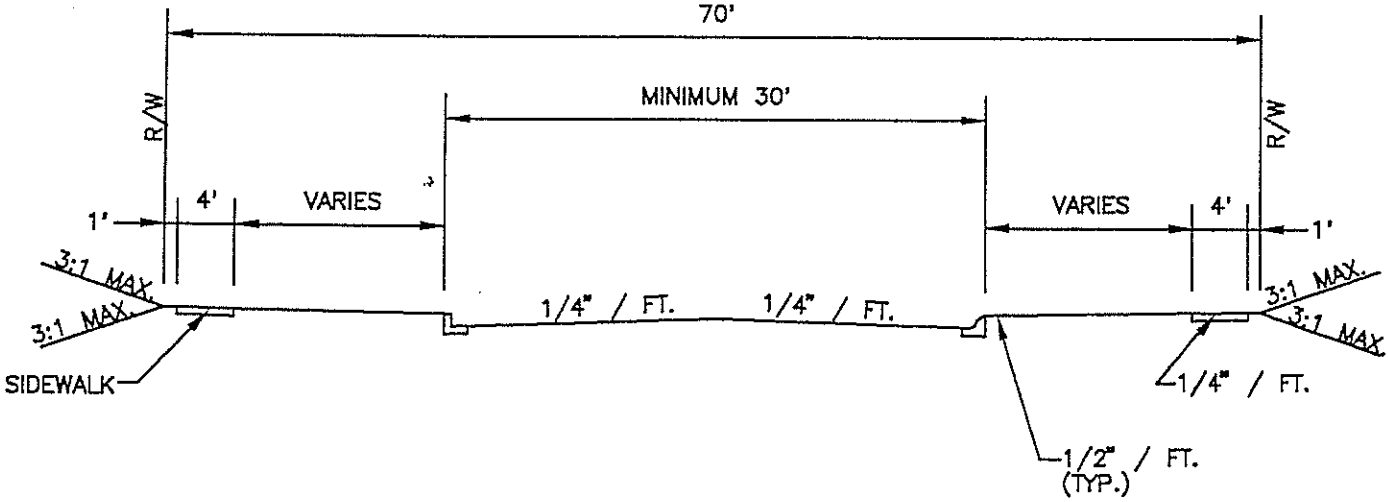

TYPICAL SECTION – COLLECTOR STREET

TYPICAL STREET SECTION DETAIL

City of Madison
Figure V–2

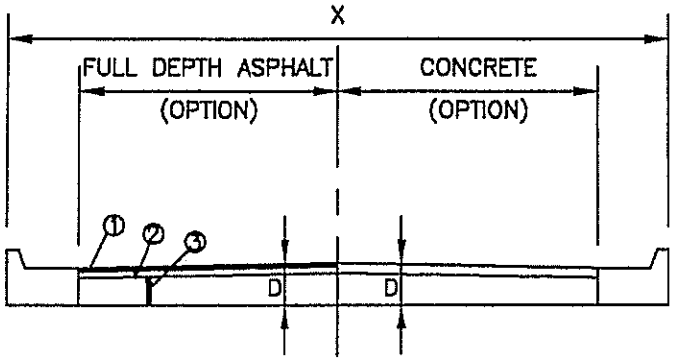

LOCAL STREETS X = 26'–30'

D = 7 1/2" FULL DEPTH ASPHALT
① 1" SURFACE #11 OR #12
② 2 1/2" BINDER #9
③ 4" BASE #5D

D = 6" CONCRETE
① 4" BASE #5D
② 4000 PSI MIN.

D = 11"
① 1" SURFACE #11 OR #12
② 2" BINDER #9
③ 8" GRANULAR SUBBASE

RESIDENTIAL COLLECTOR STREETS X = 30" - 36'

D = 9 1/2" FULL DEPTH ASPHALT
① 1" SURFACE #11 OR #12
② 2 1/2" BINDER #9
③ 6" BASE #5D

D = 7" CONCRETE
① 6" BASE #5D
② 4000 PSI MIN.

D = 13 1/2"
① 1" SURFACE #11 OR #12
② 2 1/2" BINDER #9
③ 10" GRANULAR SUBBASE

COMMERCIAL & INDUSTRIAL (ARTERIAL) COLLECTOR STREETS X = 36'

D = 11 1/2" FULL DEPTH ASPHALT
① 1" SURFACE #11 OR #12
② 2 1/2" BINDER #9
③ 8" BASE #5D (2 LIFTS)

D = 8" CONCRETE
① 8" BASE #5D
② 4000 PSI MIN.

D = 15"
① 1" SURFACE #11 OR #12
② 3" BINDER #9
③ 12" GRANULAR SUBBASE

NOTE:
1. IF GREATER THAN 10% TRUCK TRAFFIC IS ANTICIPATED, ADD 1" TO ALL TOTAL THICKNESSES.
2. DEPTH OF CONCRETE CURB SHALL EQUAL DEPTH OF CONCRETE PAVEMENT.

TYPICAL PAVEMENT SECTION DETAIL

City of Madison
Figure V–3

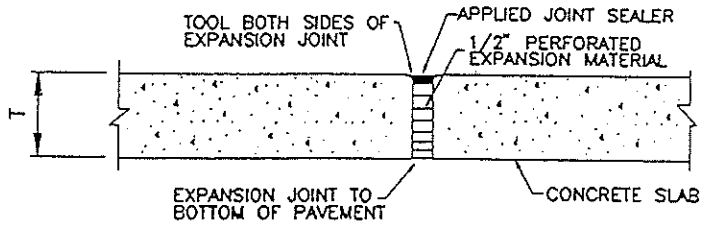

T = CONCRETE THICKNESS

EXPANSION JOINT

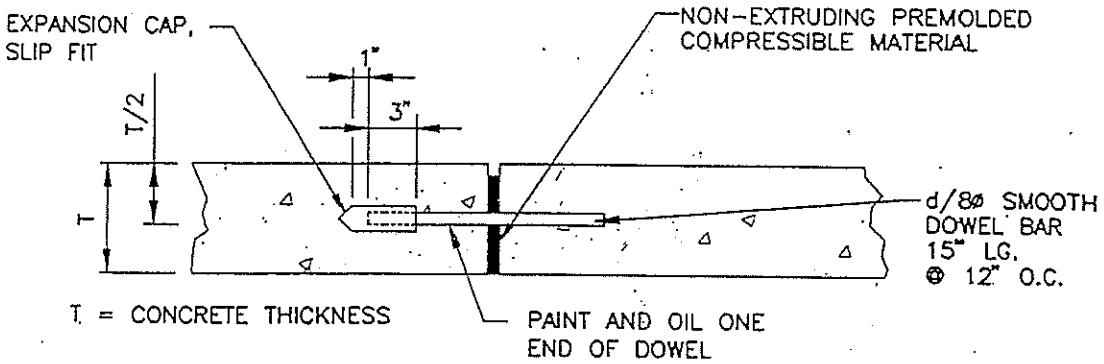

T = CONCRETE THICKNESS

DOWELED
EXPANSION JOINT (ALTERNATE)

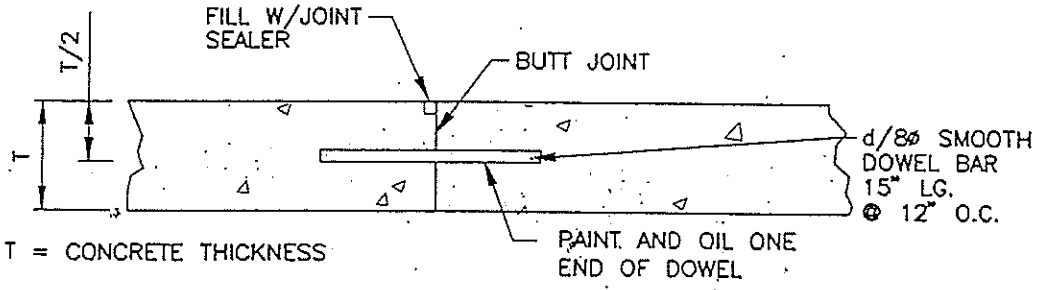

T = CONCRETE THICKNESS

TRANSVERSE
CONSTRUCTION JOINT

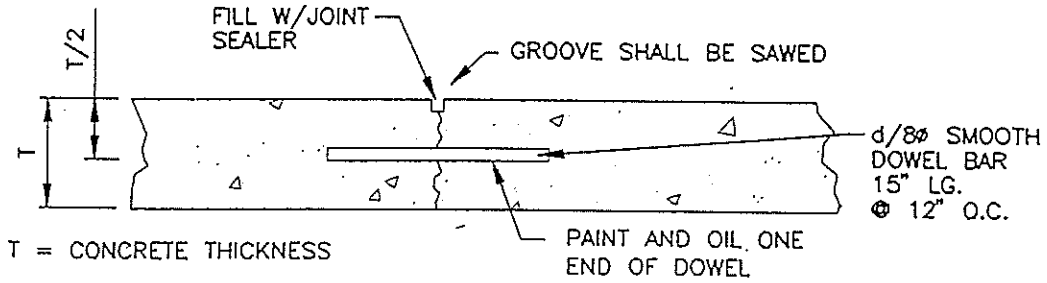

T = CONCRETE THICKNESS

DOWELED
CONTRACTION JOINT

JOINT DETAILS

City of Madison
Figure V-4

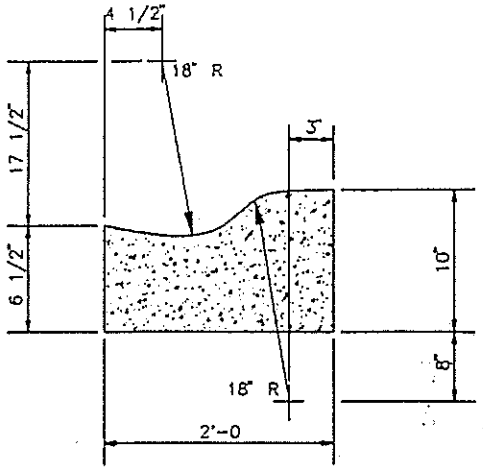

ROLL CURB AND GUTTER - TYPE I

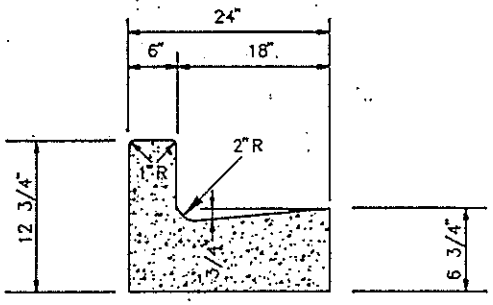

CURB AND GUTTER - TYPE II

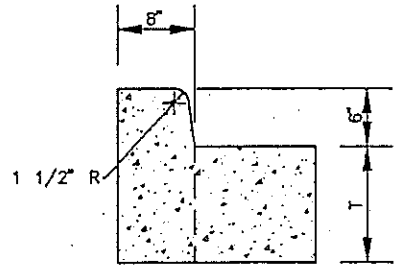

INTERGRAL CONC. CURB

CURB AND GUTTER DETAILS

City of Madison
Figure V-5

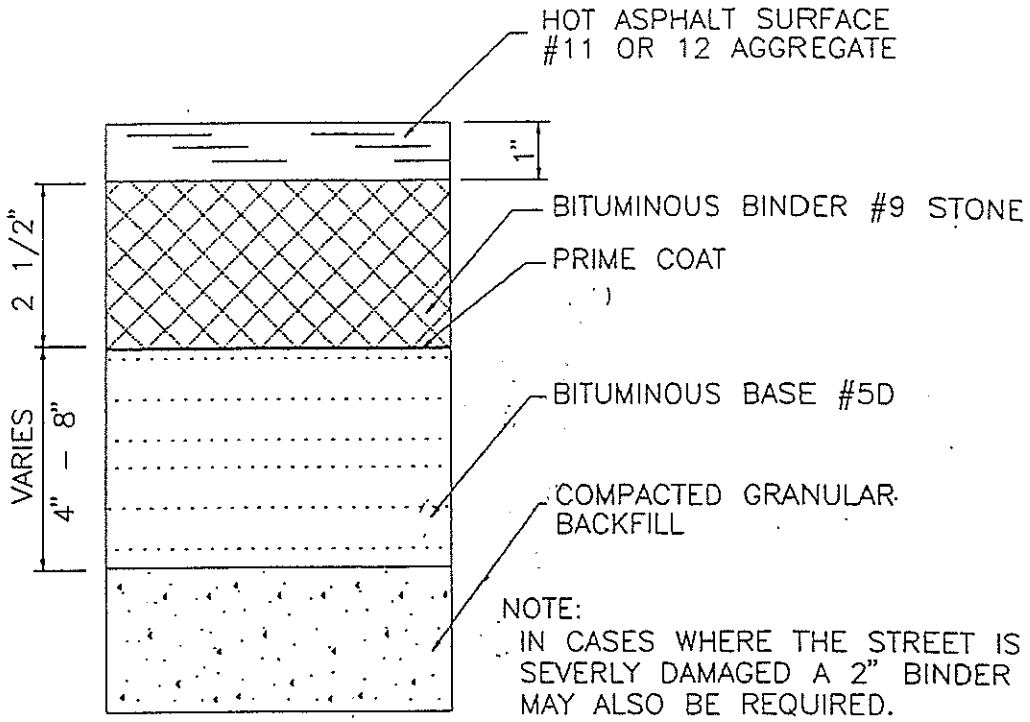

BITUMINOUS PATCHING

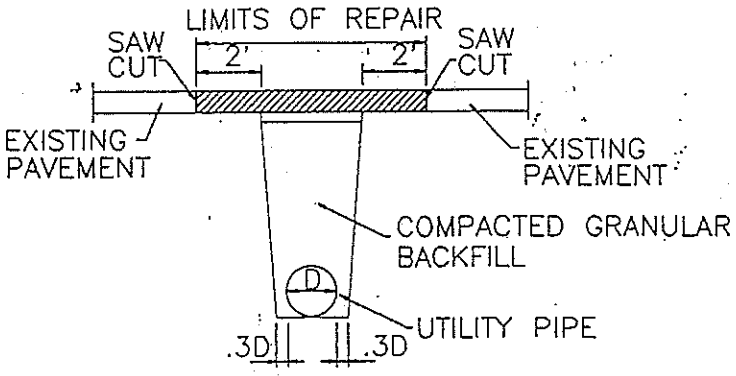

NOTE:
SAW CUT 1/3 PAVEMENT THICKNESS THEN BREAK OUT.
PAVEMENT REPLACEMENT TO BE FULL DEPTH ASPHALT (CONCRETE)

REPAIR OF PAVEMENT CUTS

City of Madison
Figure V-6

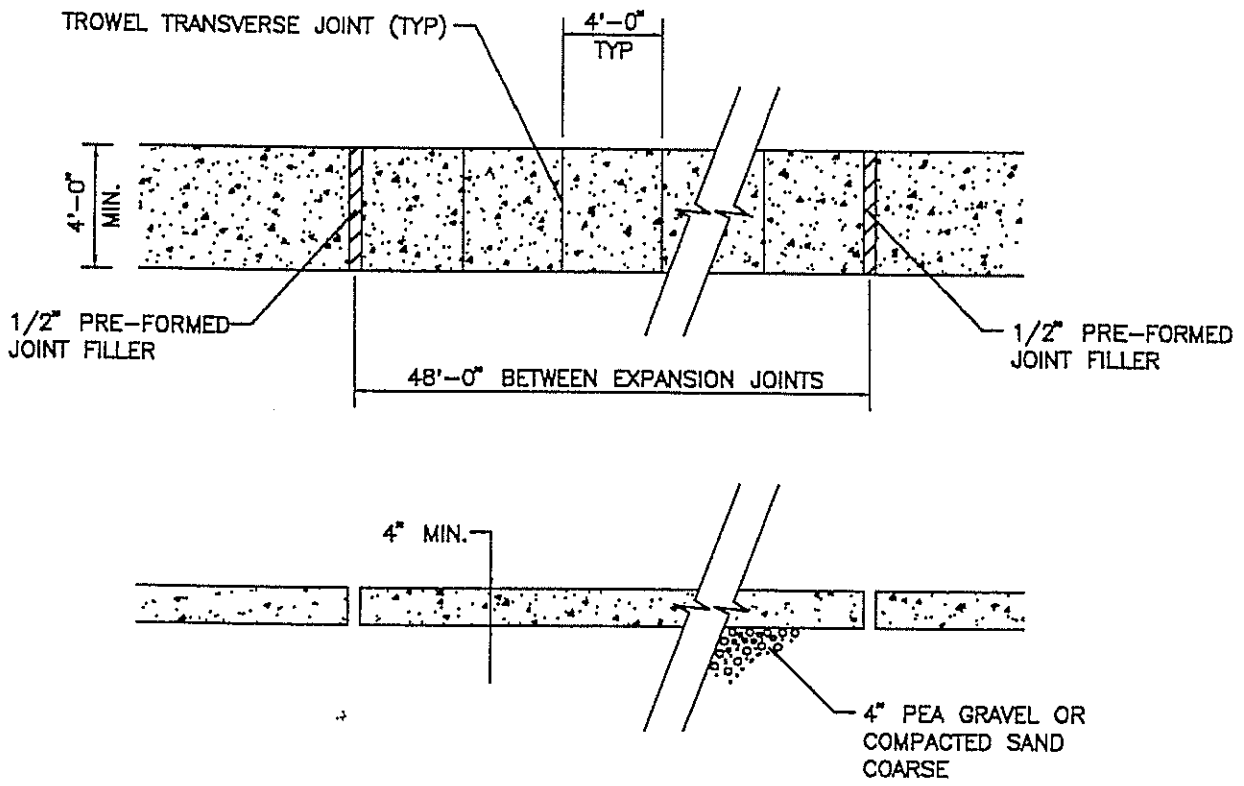

ALL CONCRETE TO BE 3,000 psi MIN.
COMPRESSIVE STRENGTH

CONCRETE SIDEWALK DETAILS

City of Madison
Figure V-7

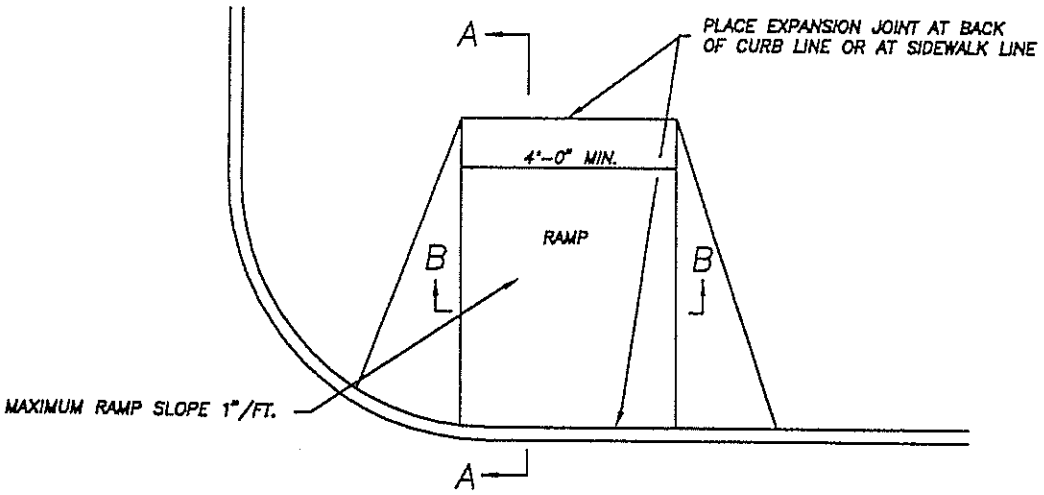

PLAN VIEW

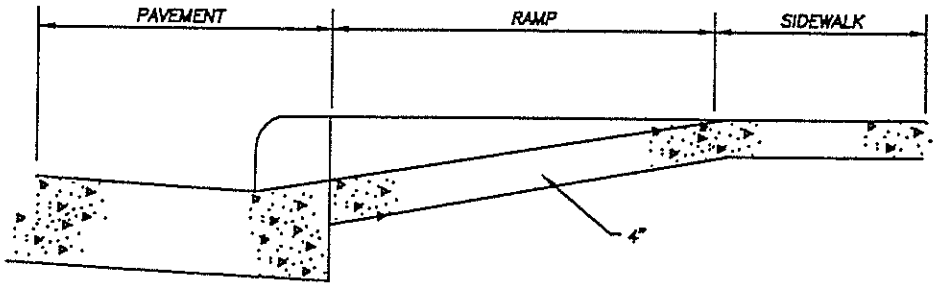

SECTION A–A

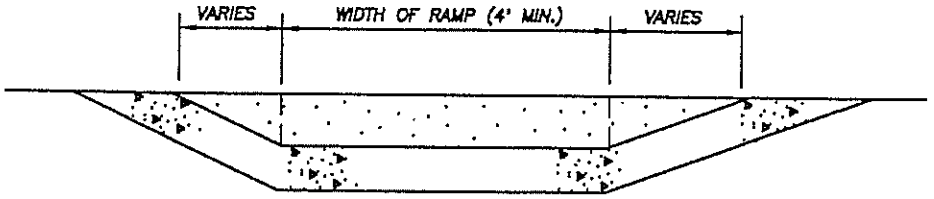

SECTION B–B

SIDEWALK HANDICAP RAMP DETAIL

City of Madison
Figure V–8

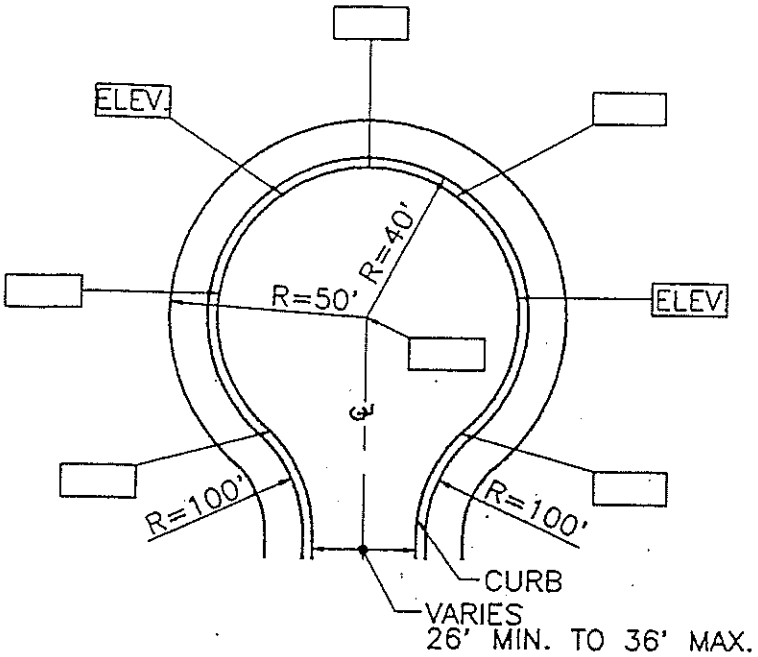

TYPE 1

GENERAL NOTE:

1. TYPE 1 SHALL BE USED ONLY IN RESIDENTIAL SUBDIVISIONS; ALL OTHER USE TYPE 2.
2. WARNING SIGNS SHALL BE POSTED AT ENTRANCE TO STREET, INDICATING NO OUTLET.
3. DETAIL SHALL BE IDENTIFIED BY STREET NAME.
4. ELEVATIONS PROVIDED SHALL BE PROPOSED FLOW LINE OF GUTTER.
5. ONE DETAIL SHALL BE PROVIDED FOR EACH CUL-DE-SAC.
6. SCALE SHALL BE 1"=40' OR LARGER.

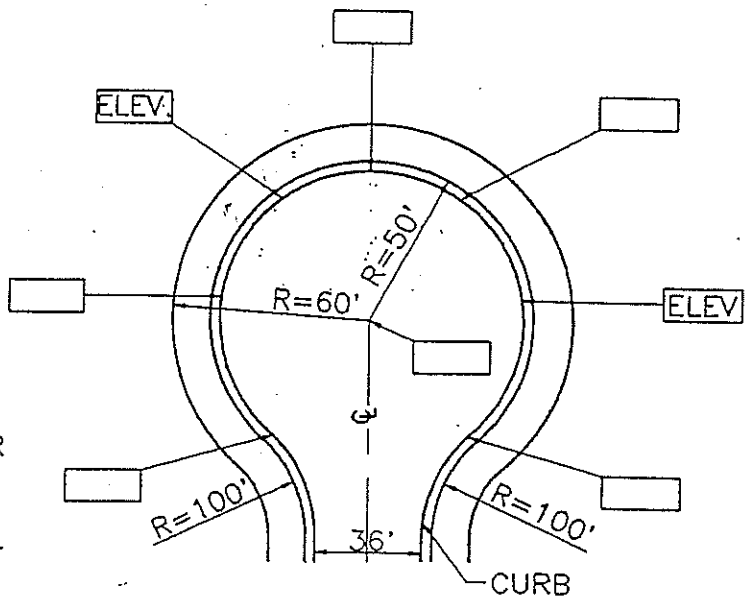

TYPE 2

SUBDIVISION CUL-DE-SAC DETAIL

City of Madison
Figure V-9

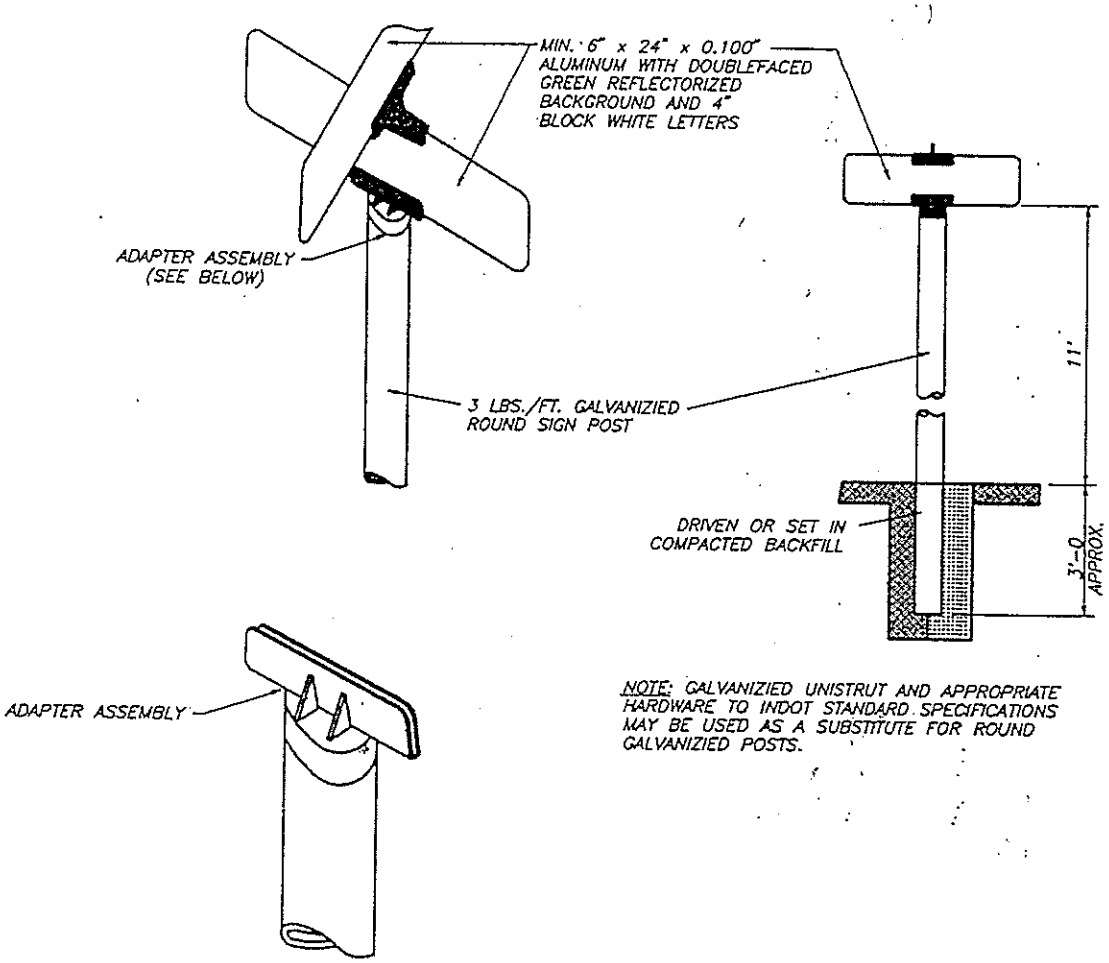

NOTE: GALVANIZIED UNISTRUT AND APPROPRIATE HARDWARE TO INDOT STANDARD SPECIFICATIONS MAY BE USED AS A SUBSTITUTE FOR ROUND GALVANIZIED POSTS.

STREET SIGN DETAILS

City of Madison
Figure V-10

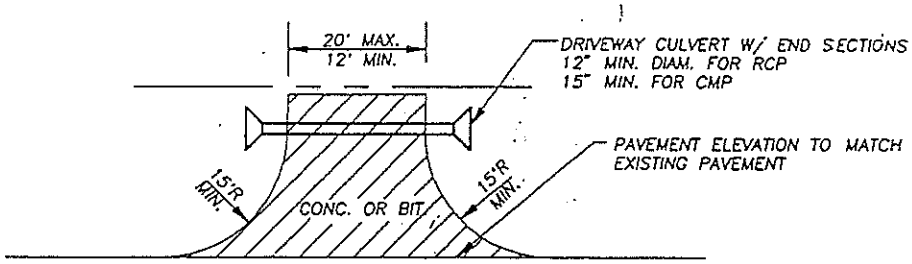

PRIVATE DRIVE WITH OPEN DITCHES

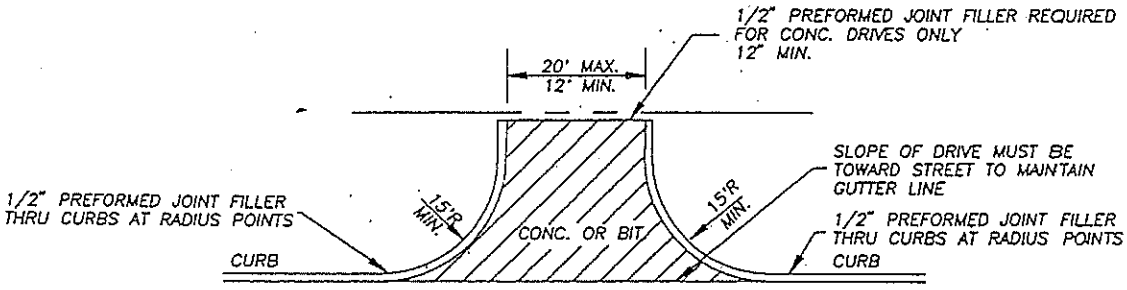

PRIVATE DRIVE WITH CURBS

(INTEGRAL, COMBINED, MONOLITHIC, OR STRAIGHT CURBS)

NOTES:

1. CROSS-HATCHED AREAS SHALL BE EITHER 6" PLAIN CONCRETE OR 1" BITUMINOUS SURFACE ON 2" BITUMINOUS BASE ON 4" TYPE "P" COMPACTED AGGREGATE BASE OR 1" BITUMINOUS SURFACE ON 4" BITUMINOUS COATED AGGREGATE BASE WITH 5D STONE EXTENDING TO THE SIDEWALK OR R/W LINE WHICHEVER IS NEAREST TO THE ROADWAY.

2. SUBGRADE UNDER ALL CURBS, SIDEWALKS AND DRIVES SHALL BE COMPACTED IN ACCORDANCE WITH INDOT STANDARDS

3. ELEVATIONS SHALL BE SHOWN FOR ALL CULVERT INVERTS AND DITCH FLOWLINES WHERE APPLICABLE

RESIDENTIAL DRIVEWAY DETAILS

City of Madison
Figure V-11